#WWDC18

Intentional Design

Session 802

Doug LeMoine, Design Evangelist

© 2018 Apple Inc. All rights reserved. Redistribution or public display not permitted without written permission from Apple.

Intent

People

Be intentional

Design intentionally

Feel simple

Natural

Designer clichés

Comfort and confidence

5

Elements

9:41
Ingegneri Dell Provincia di Roma
Roma Termini
Via Principe Amedeo
Giardino Dell'acquario Romano
Via Carlo Alberto
23 min
Via Cavour
Via Urbana
Via del Boschetto
Via in Selci
Università degli Studi di Roma 'la Sapienza
Via Merulana
Via Machiavelli
Via Mecenate
Parco del Colle Oppio
Colosseum
Via Labicana
67°
To Colosseum
From Roma Termini
23 min
1.0 mi · Via Cavour
GO
Drive
Walk
Transit
Ride

iTranslate Converse

9:41
Settings
Tap & Hold
to translate
English or Italian

Conversation

9:41
Settings
Tap & Hold
to translate
English or Italian

9:41
Settings
Tap & Hold
to translate
English or Italian

9:41
Settings
Tap & Hold
to translate
English or Italian

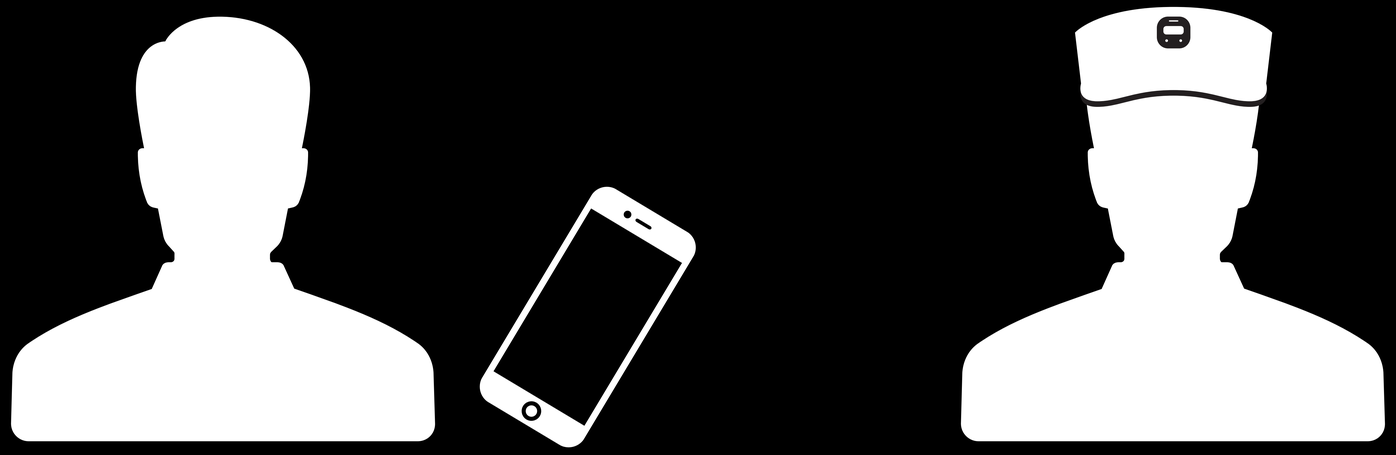

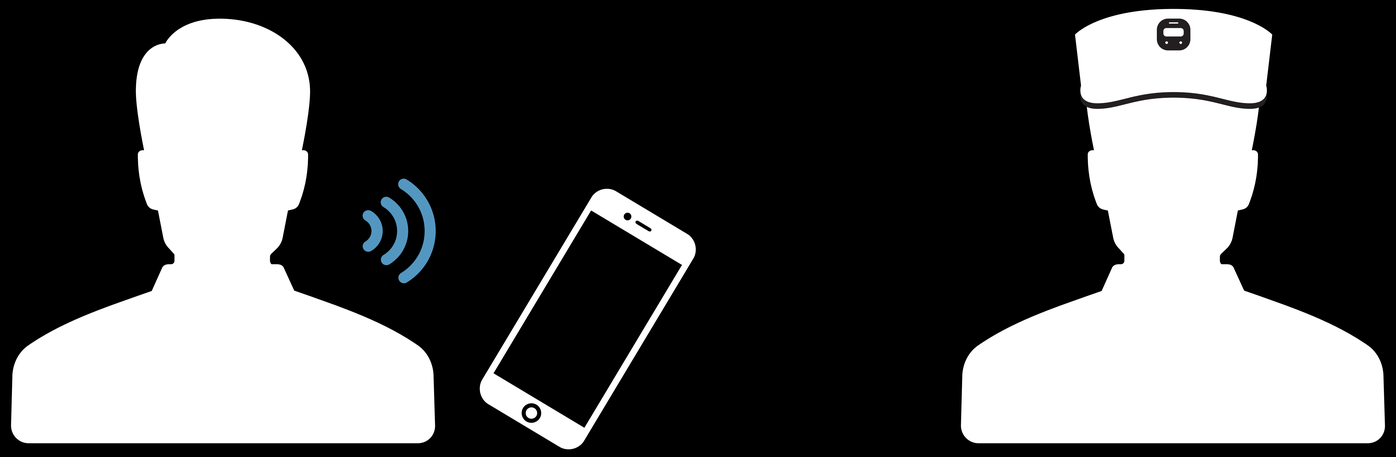

Hello

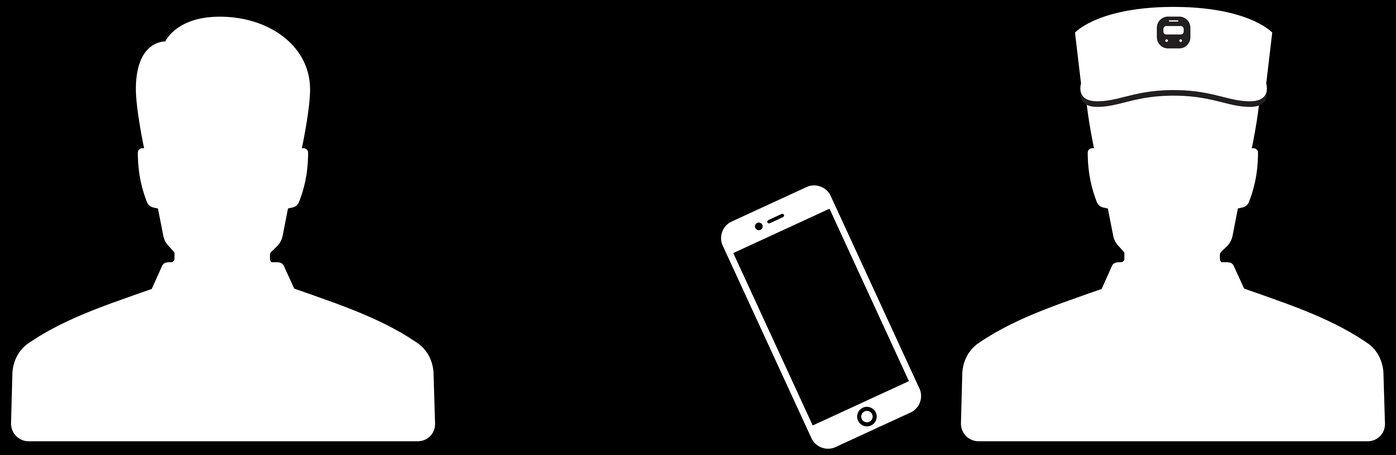

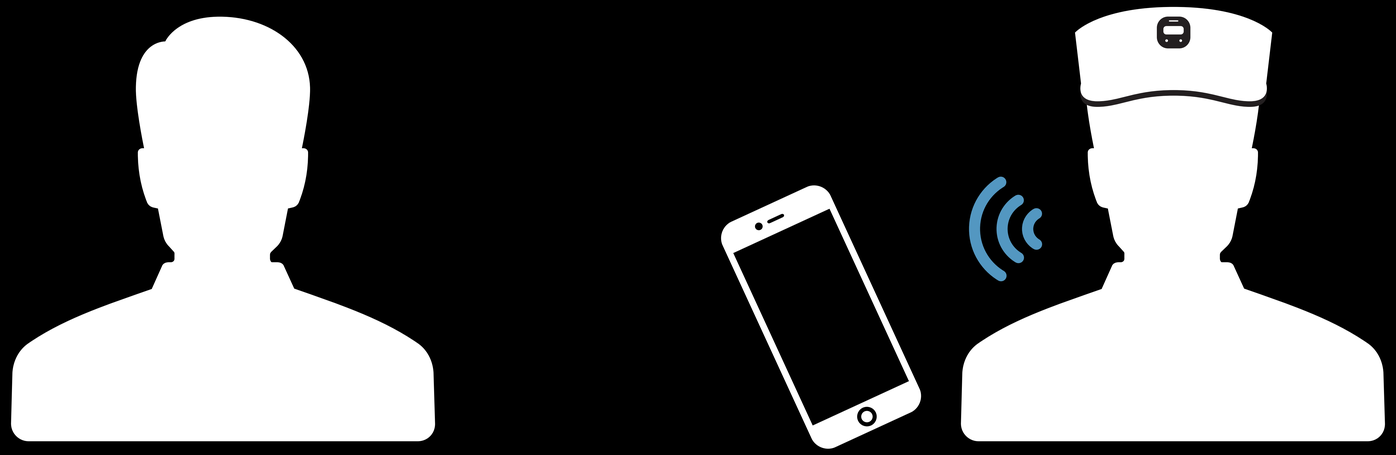

Ciao

9:41
Settings
Tap & Hold
to translate
English or Italian

9:41
Settings
Tap & Hold
to translate
English or Italian

9:41
Settings
Tap & Hold
to translate
English or Italian

9:41
Settings
Tap & Hold
to translate
English or Italian

9:41
Settings
grazie mille
Tap & Hold to translate.
Tap to replay.
English or Italian

1. Radical simplification

Context

9:41
Settings
Tap & Hold
to translate
English or Italian

Removing

Vanido

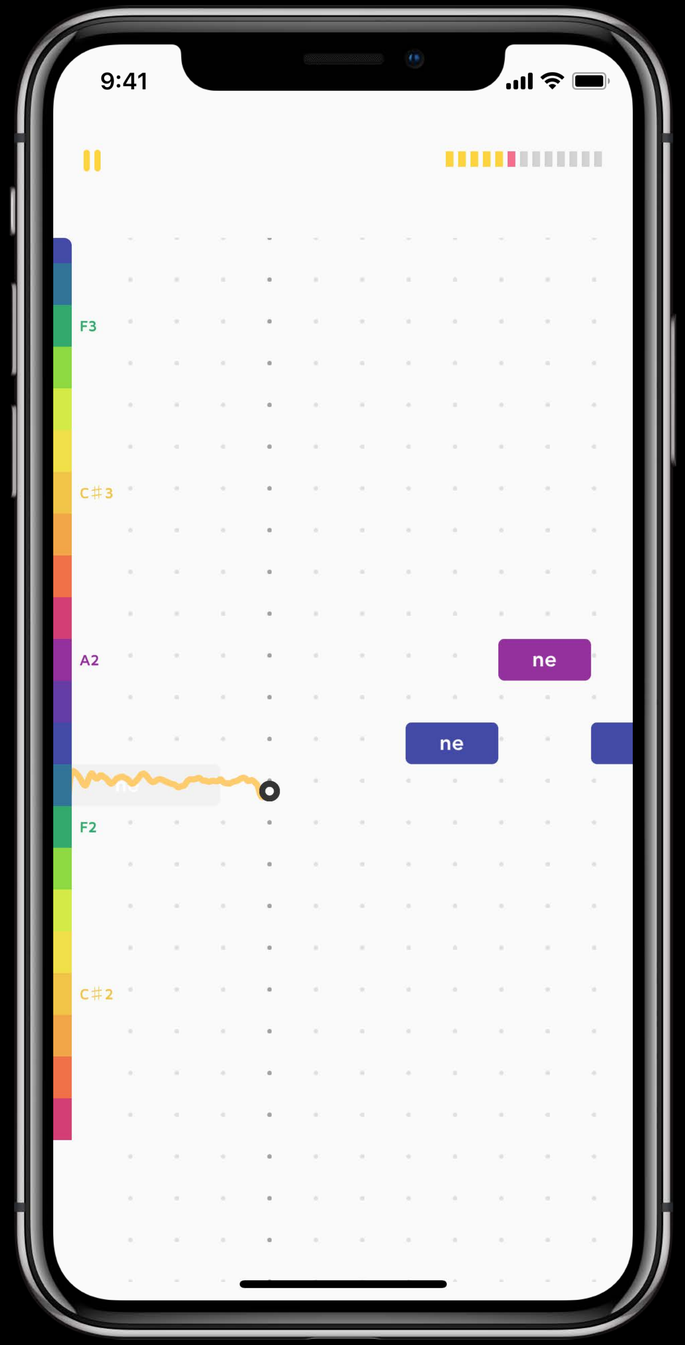
9:41
F3
C#3
A2
ne
ne
F2
C#2

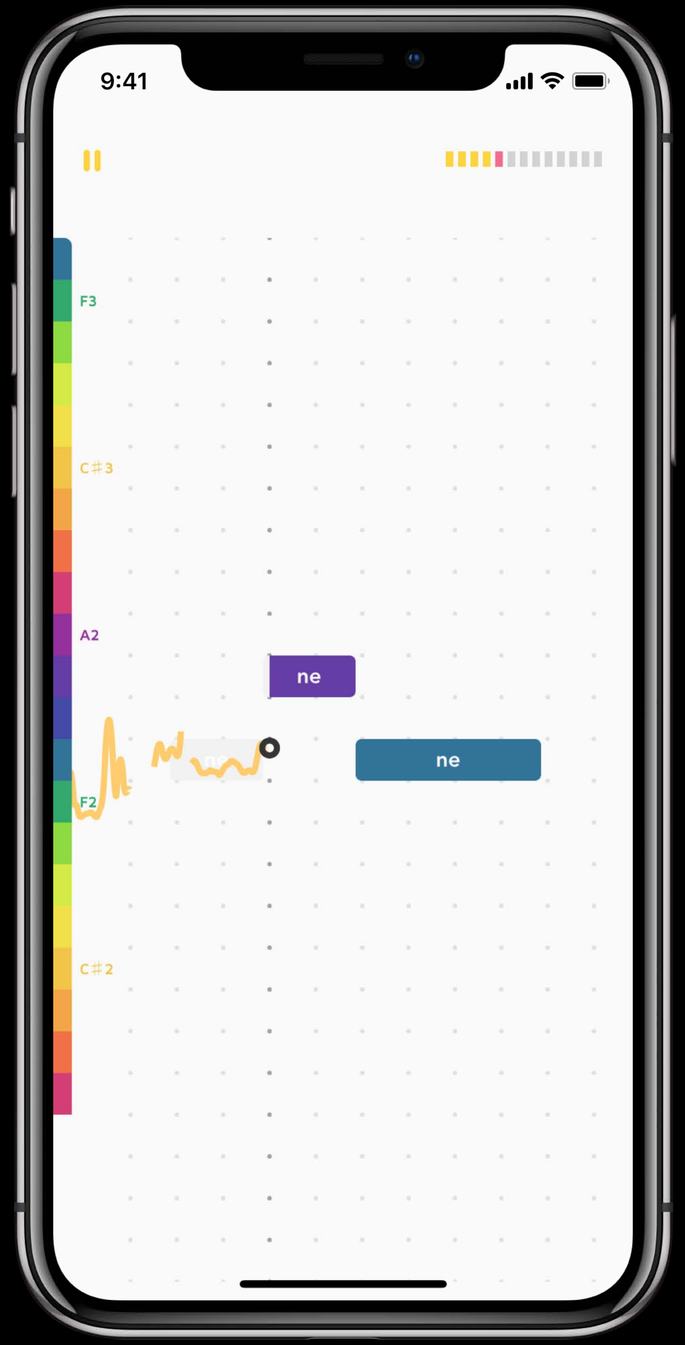
9:41
F3
C#3
A2
ne
ne
F2
C#2

Demo

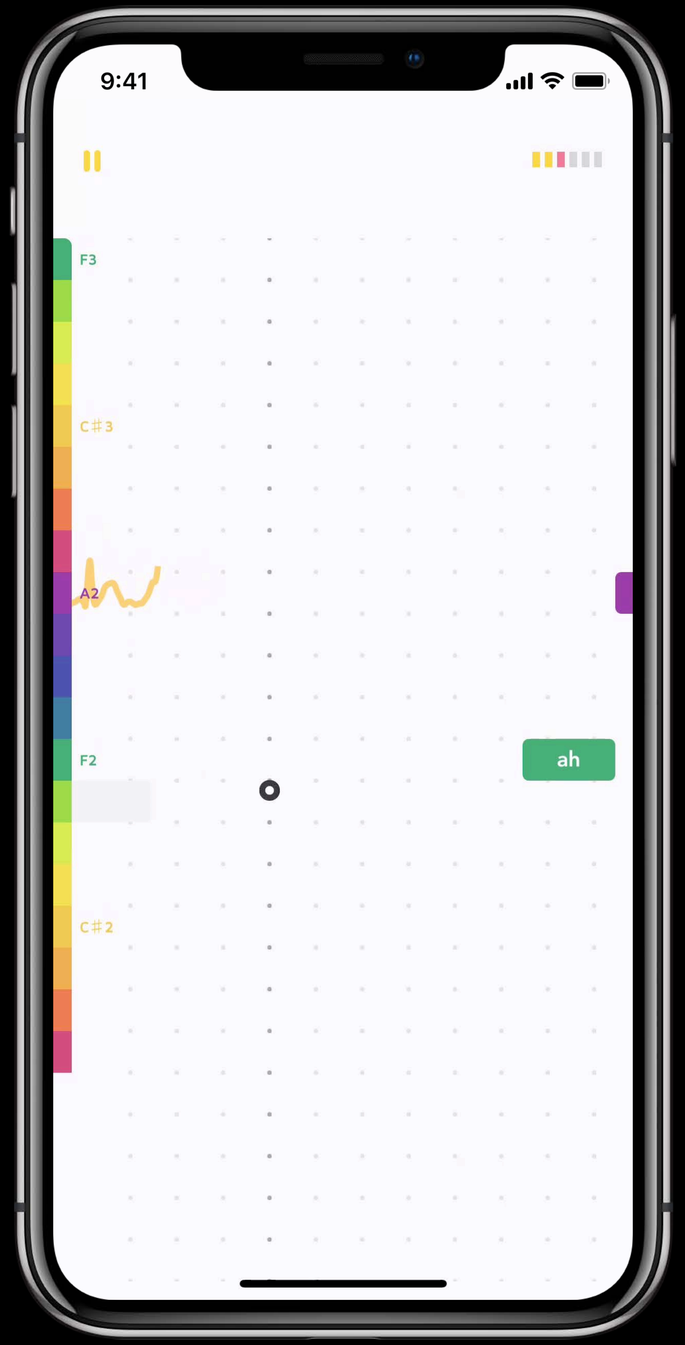
9:41
F3
C#3
A2
F2
ah
C#2

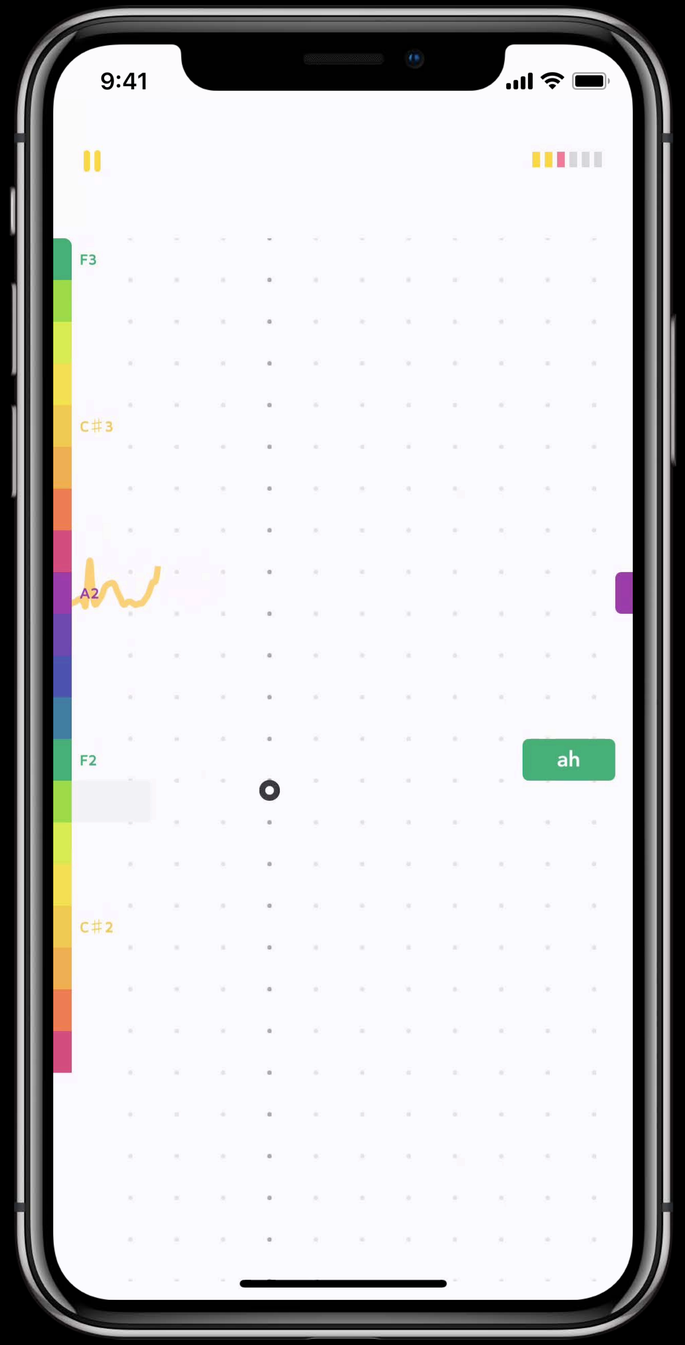
9:41
F3
C#3
A2
F2
ah
C#2

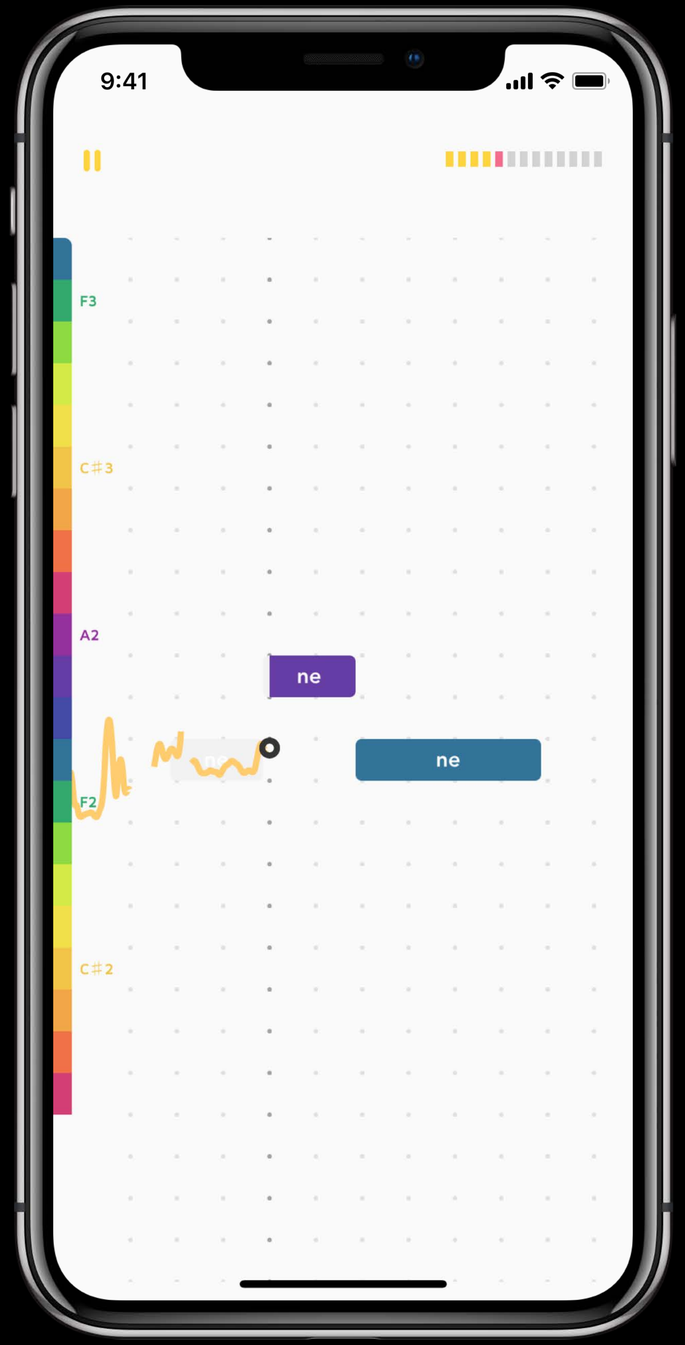
9:41
F3
C#3
A2
ne
ne
F2
C#2

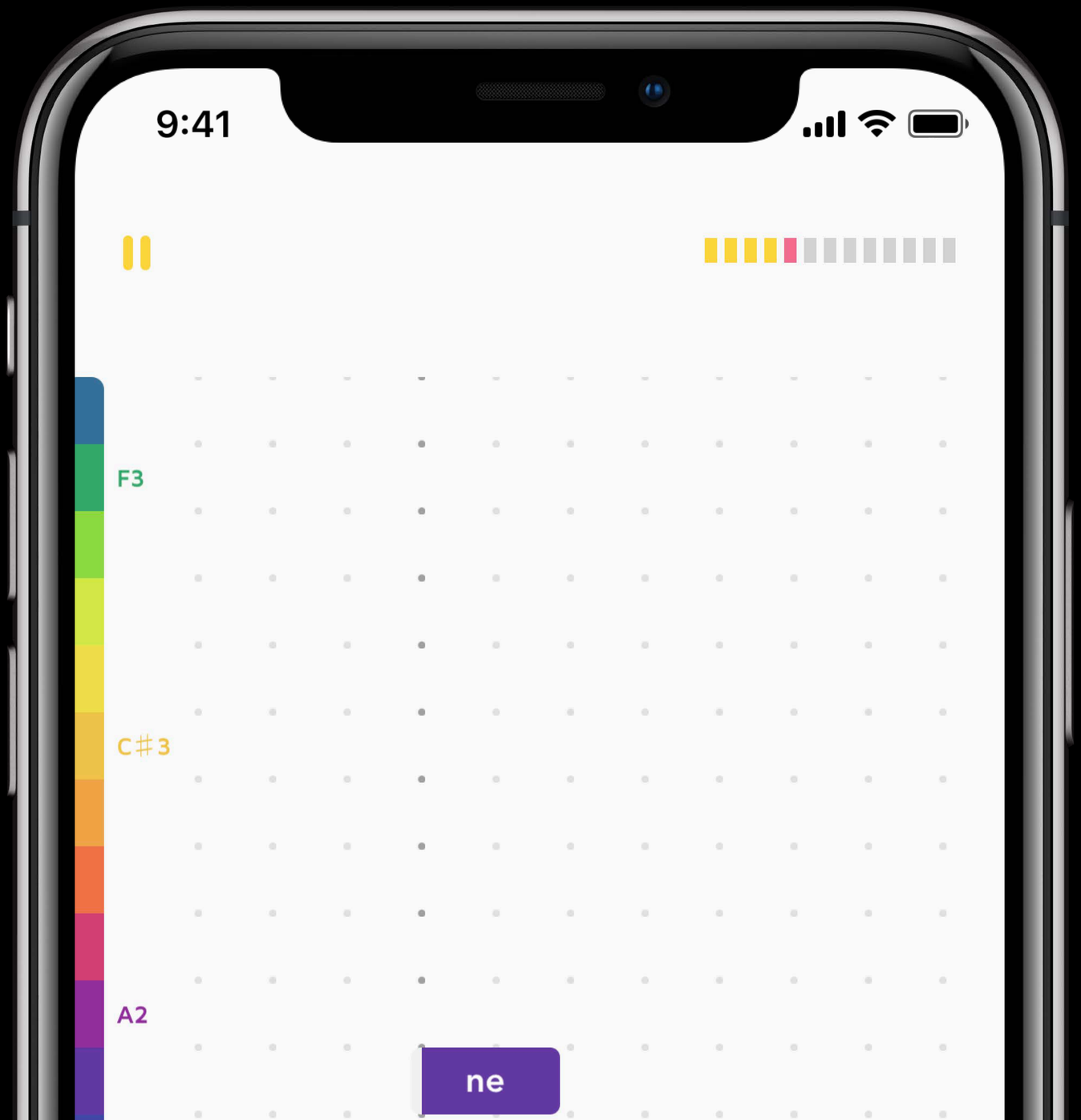
9:41
F3
C#3
A2
ne

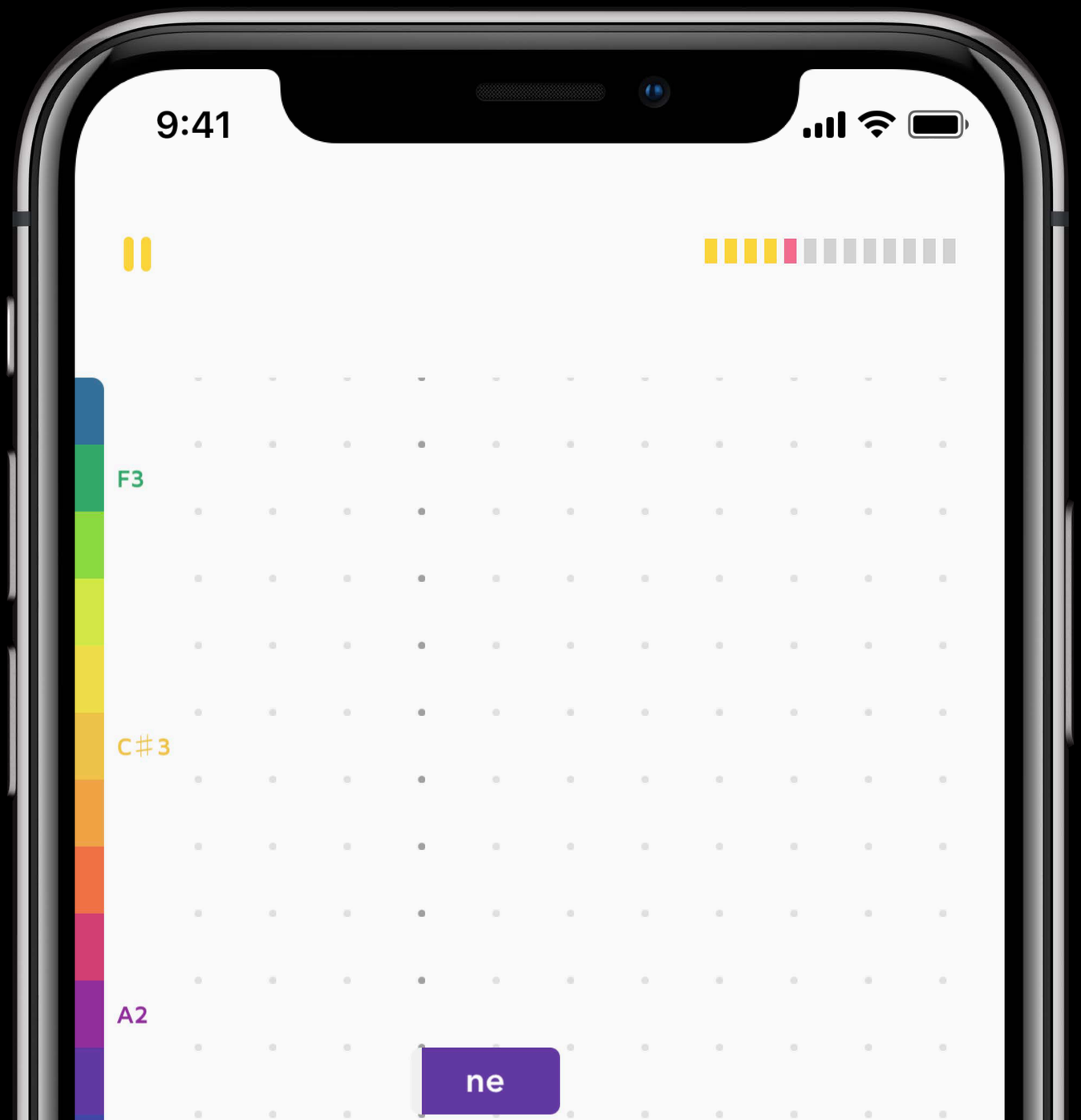
9:41
F3
C♯3
A2
ne

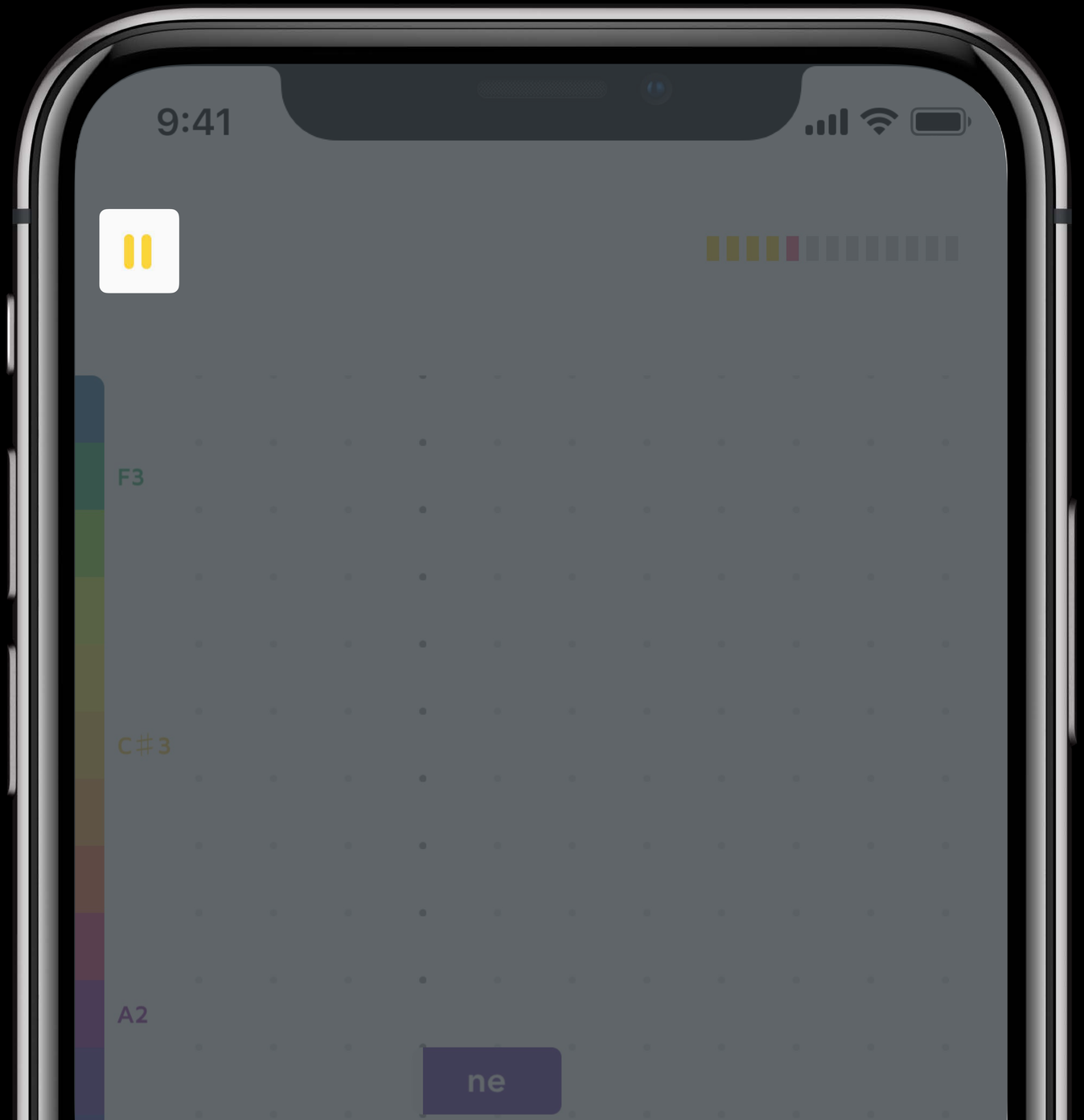
9:41
F3
C#3
A2
ne

1. Radical simplification

Being radical is risky

What people really want

Dig past superficial needs

Reveal essential needs

1. Radical simplification

2. Deep understanding

Streaks Workout

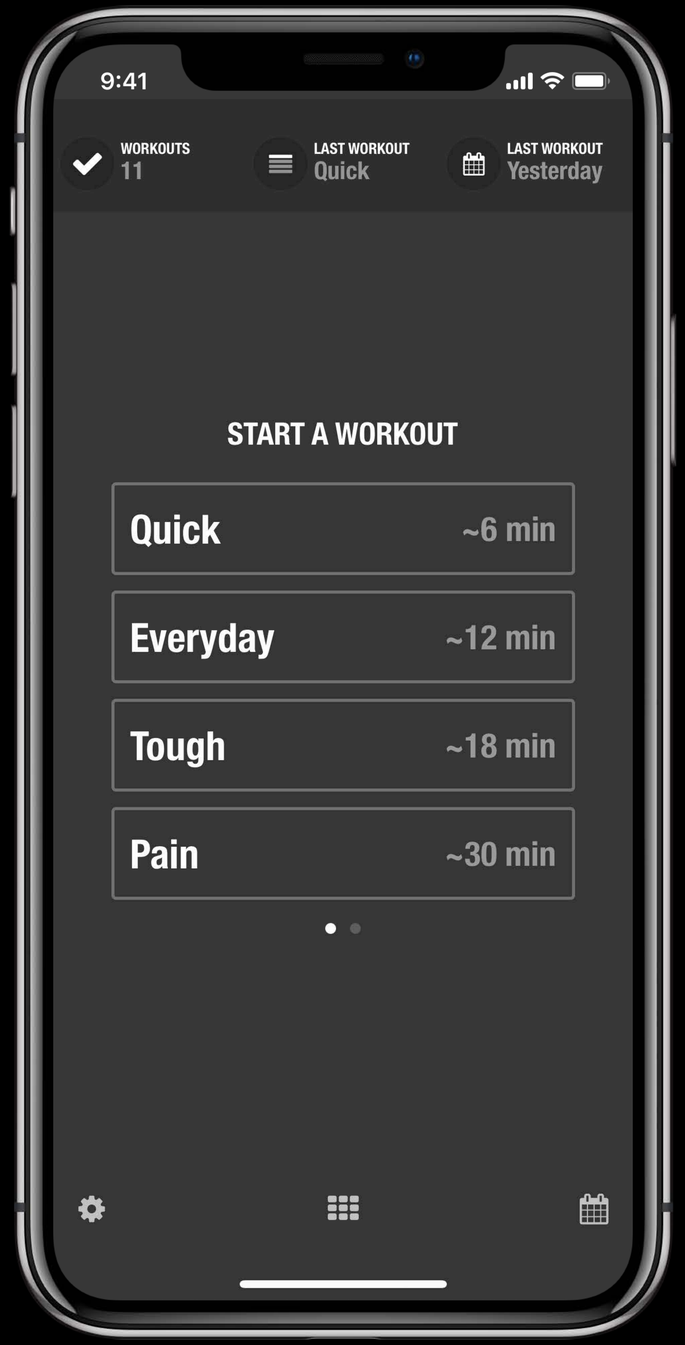
9:41
WORKOUTS
11
LAST WORKOUT
Quick
LAST WORKOUT
Yesterday
START A WORKOUT
Quick
~6 min
Everyday
~12 min
Tough
~18 min
Pain
~30 min

Inertia

Inertia */i-ˈnər-shə/*
noun

1. Disinclination to move
2. Indisposition to exertion or change

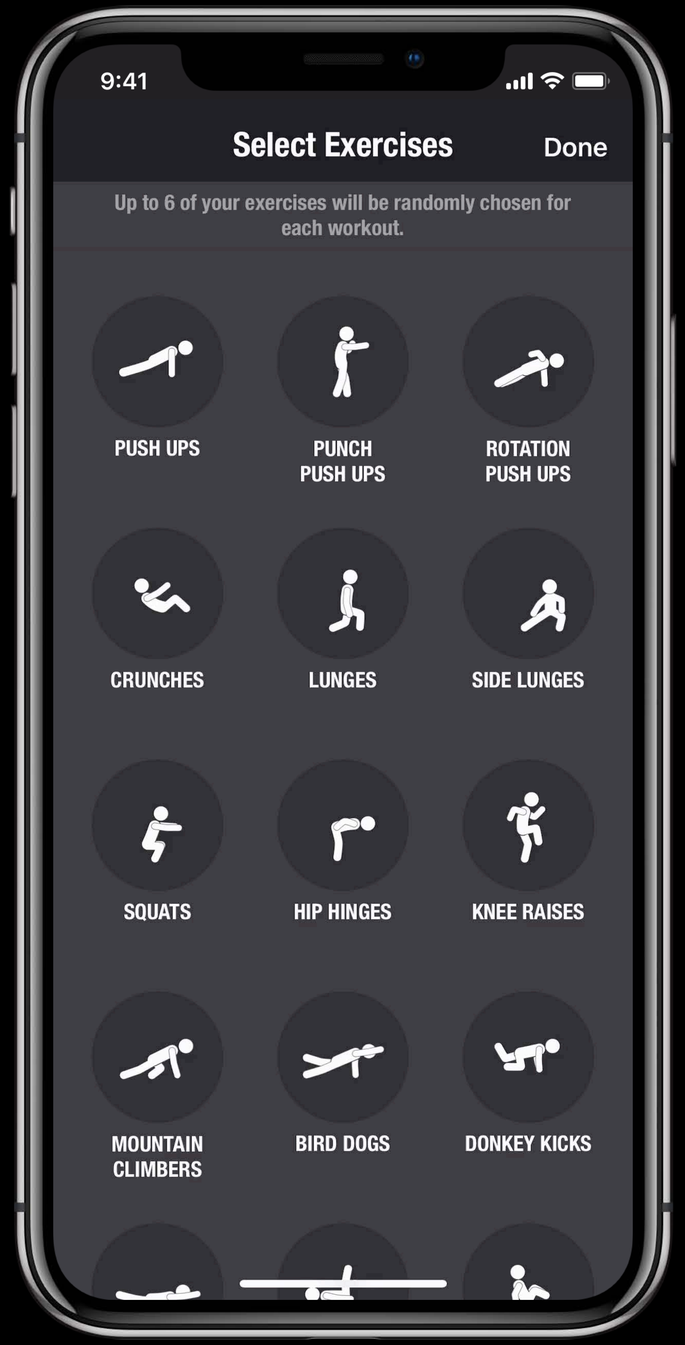
9:41
Select Exercises
Done
Up to 6 of your exercises will be randomly chosen for each workout.
PUSH UPS
PUNCH PUSH UPS
ROTATION PUSH UPS
CRUNCHES
LUNGES
SIDE LUNGES
SQUATS
HIP HINGES
KNEE RAISES
MOUNTAIN CLIMBERS
BIRD DOGS
DONKEY KICKS

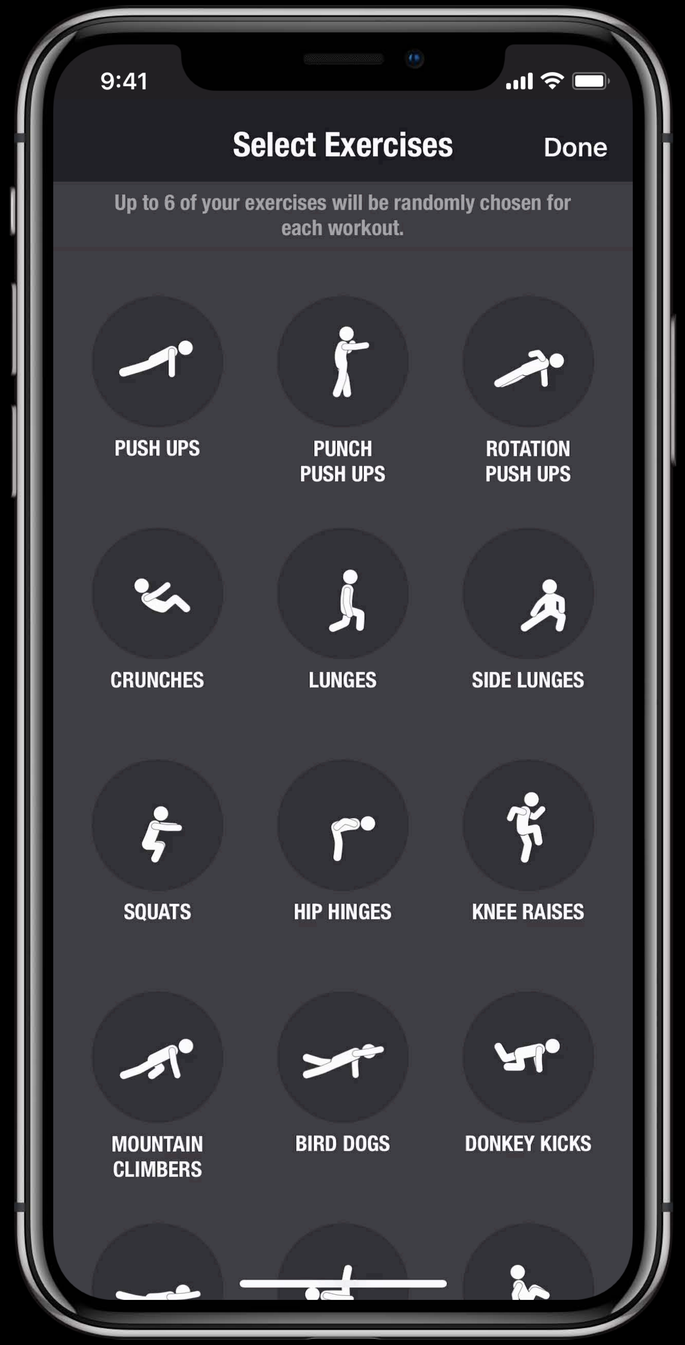
9:41
Select Exercises
Done
Up to 6 of your exercises will be randomly chosen for each workout.
PUSH UPS
PUNCH PUSH UPS
ROTATION PUSH UPS
CRUNCHES
LUNGES
SIDE LUNGES
SQUATS
HIP HINGES
KNEE RAISES
MOUNTAIN CLIMBERS
BIRD DOGS
DONKEY KICKS

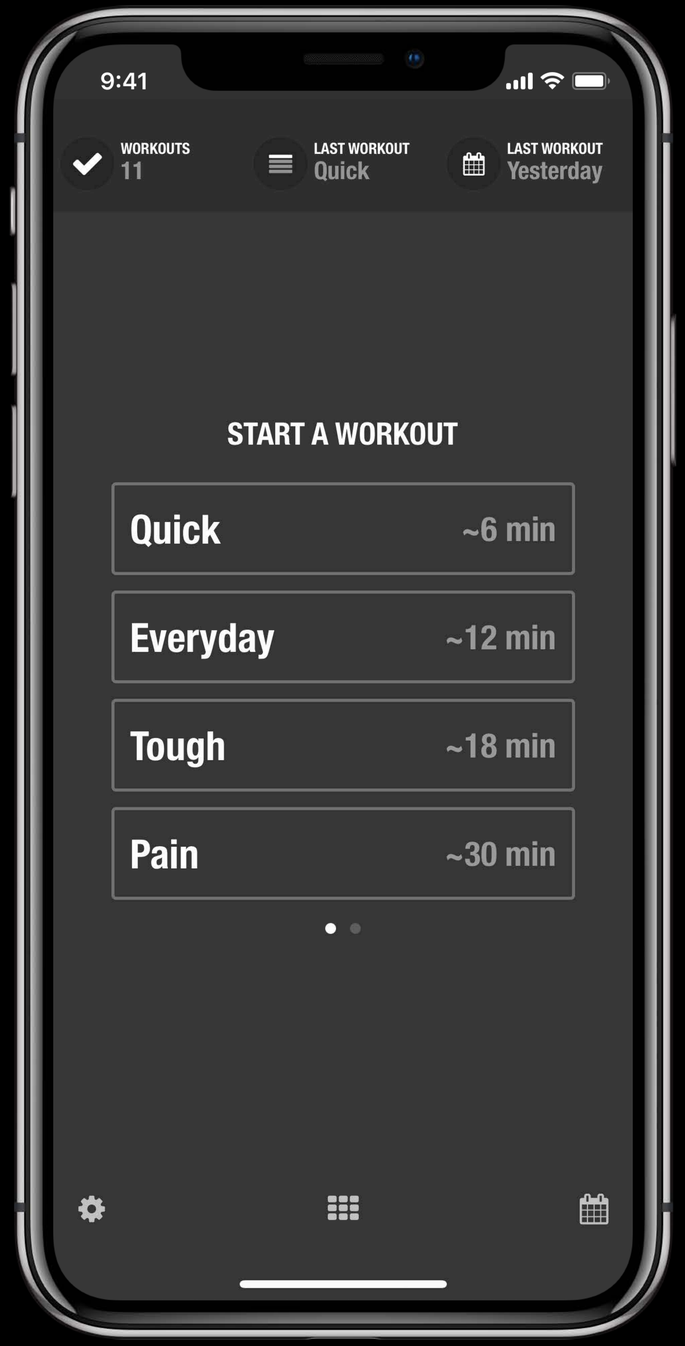
9:41
WORKOUTS
11
LAST WORKOUT
Quick
LAST WORKOUT
Yesterday
START A WORKOUT
Quick
~6 min
Everyday
~12 min
Tough
~18 min
Pain
~30 min

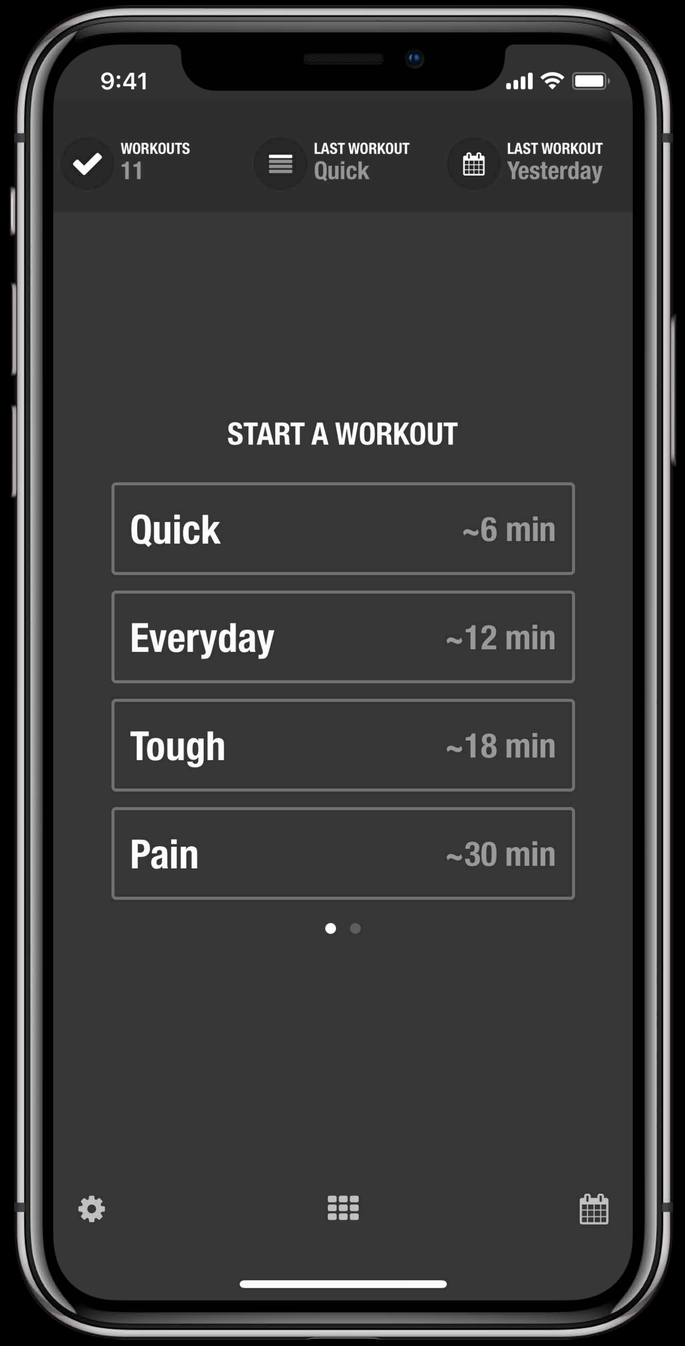
9:41
WORKOUTS
11
LAST WORKOUT
Quick
LAST WORKOUT
Yesterday
START A WORKOUT
Quick
~6 min
Everyday
~12 min
Tough
~18 min
Pain
~30 min

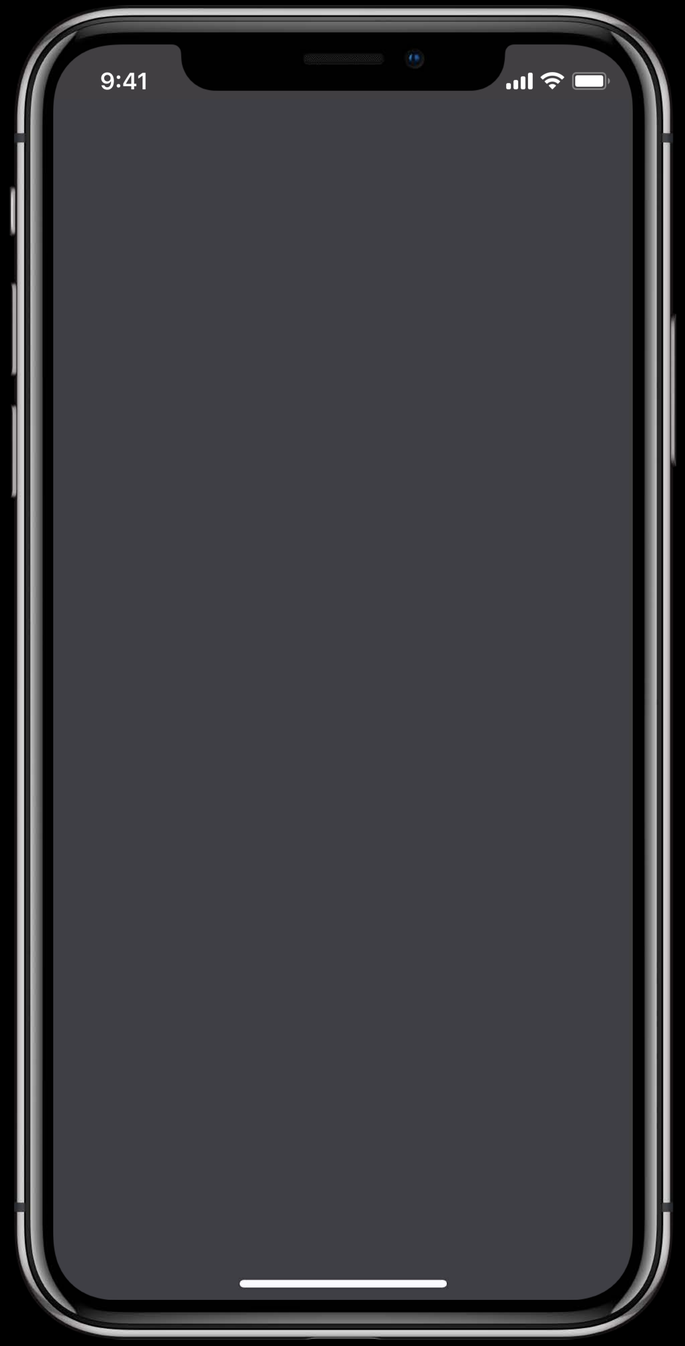
9:41

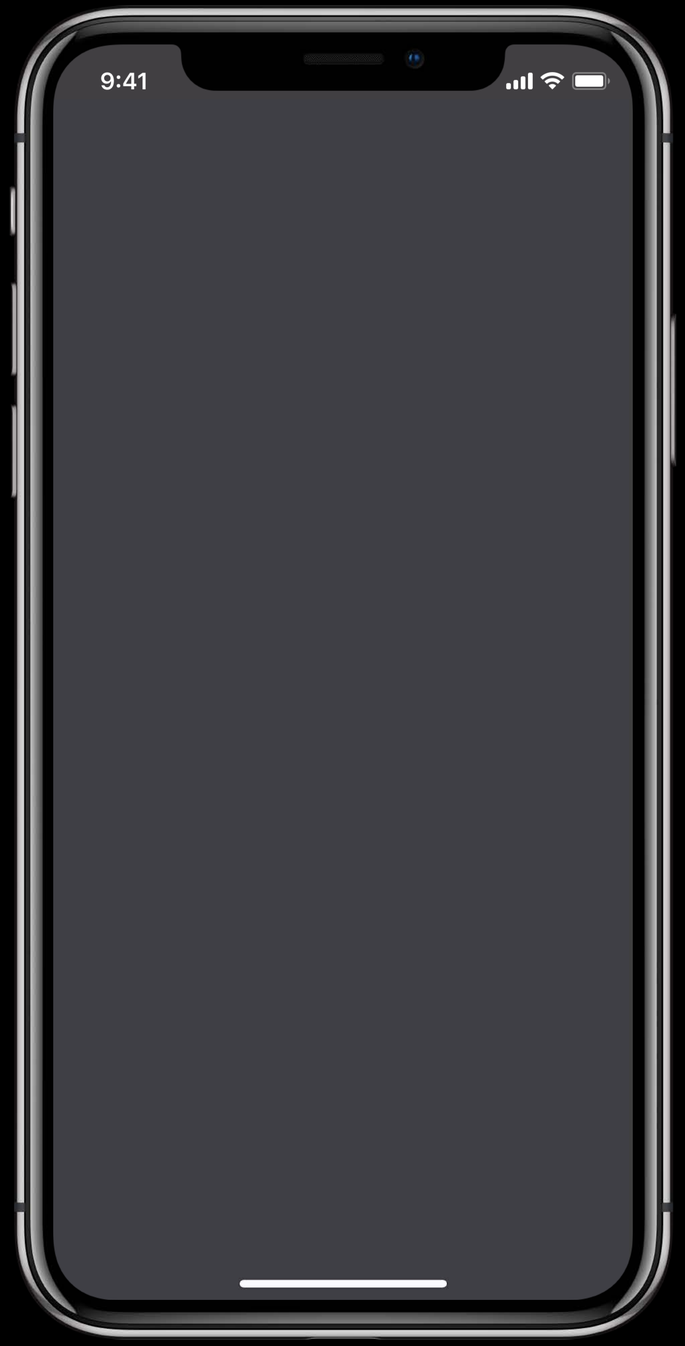
9:41

9:41
2/20
0:42
10
10
NKEY KICKS
CRUNCHES
You should feel it in your abs.

9:41
2/20
0:42
10
10
NKEY KICKS
CRUNCHES
You should feel it in your abs.

Remove work

1. Choose movements
2. Choose sequence and reps
3. Choose duration
4. Do workout

1. Choose movements
2. Choose sequence and reps
3. Choose duration
4. Do workout

1. ~~Choose movements~~
2. Choose sequence and reps
3. Choose duration
4. Do workout

1. ~~Choose movements~~
2. Choose sequence and reps
3. Choose duration
4. Do workout

1. ~~Choose movements~~
2. ~~Choose sequence and reps~~
3. Choose duration
4. Do workout

Take the work out

Take the work out of workouts

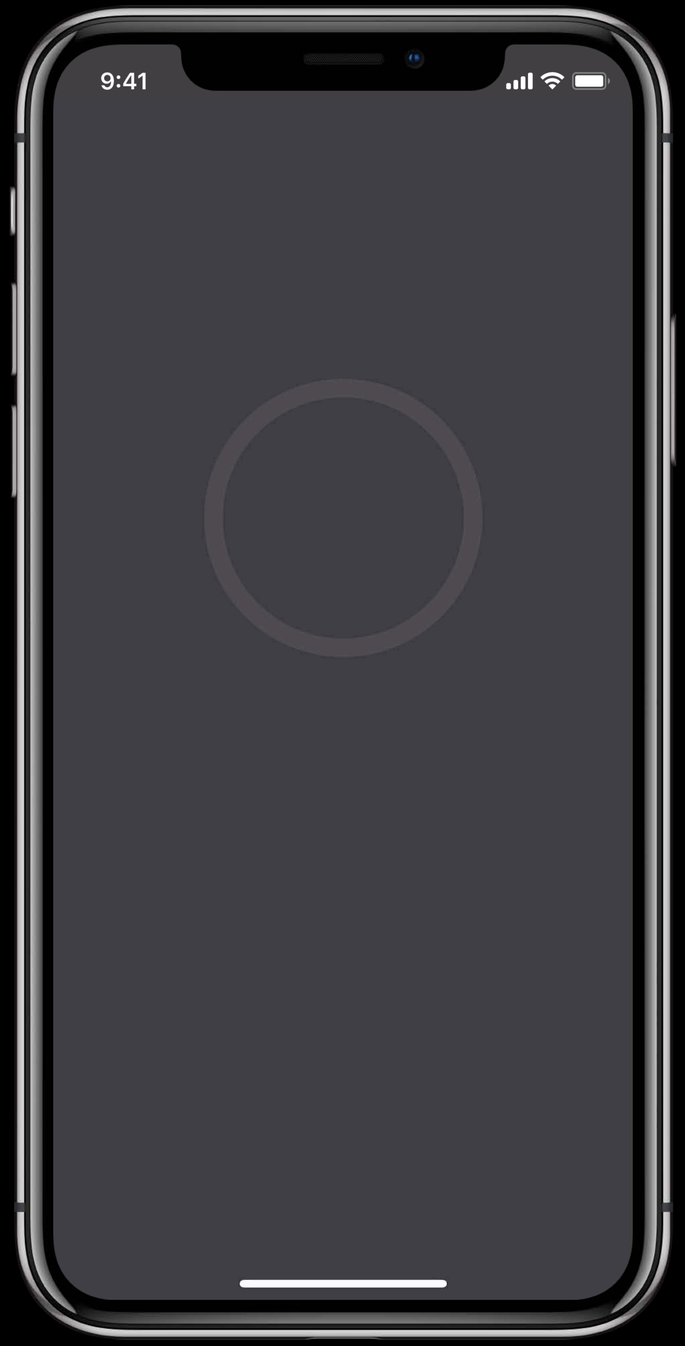
9:41

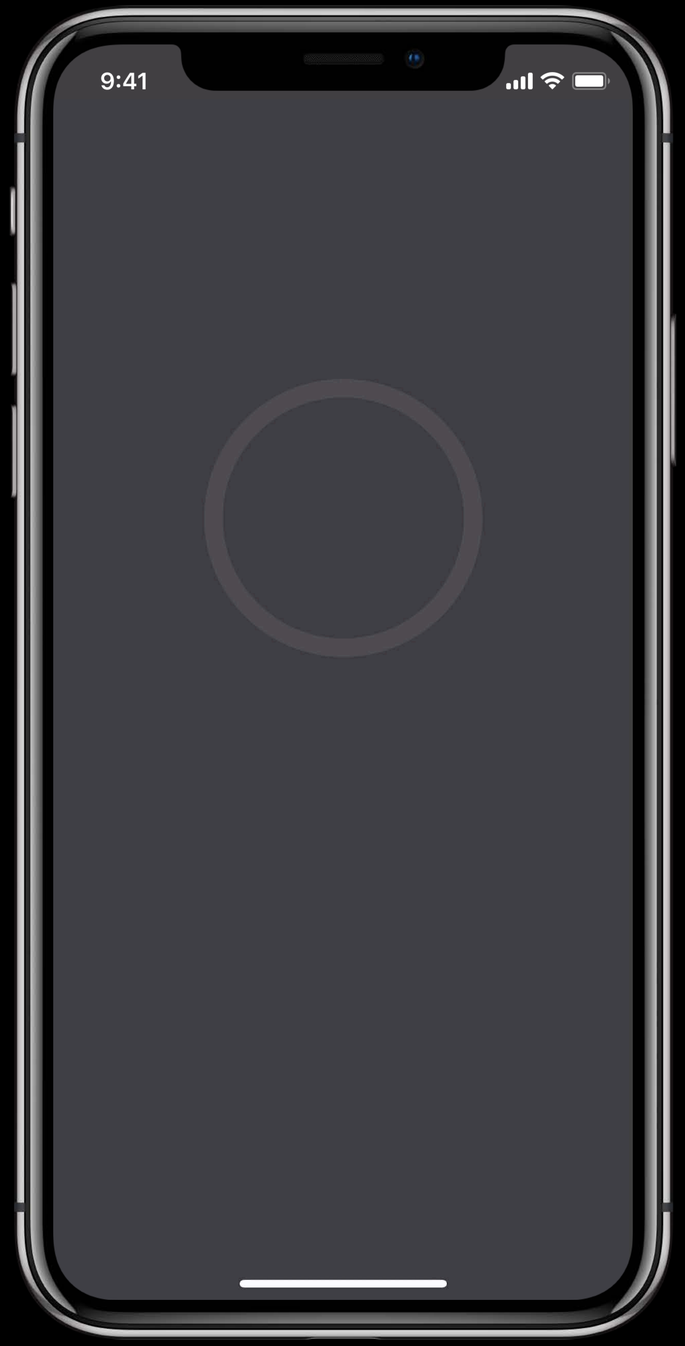
9:41

Choice = Power

“Hey! I want to choose!”

“Hey! I want to choose!”

Lots of people, probably

What inspired this?

“We'd read that there was some form of prison workout ...”

Isaac Forman, Designer of Streaks Workout

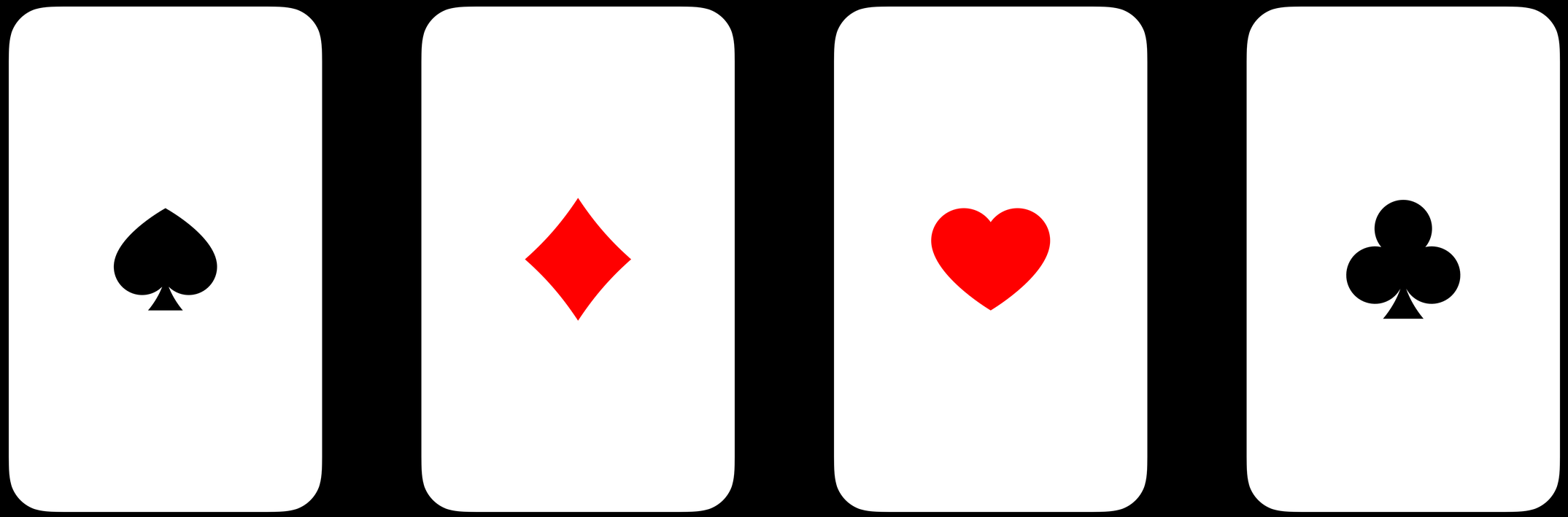

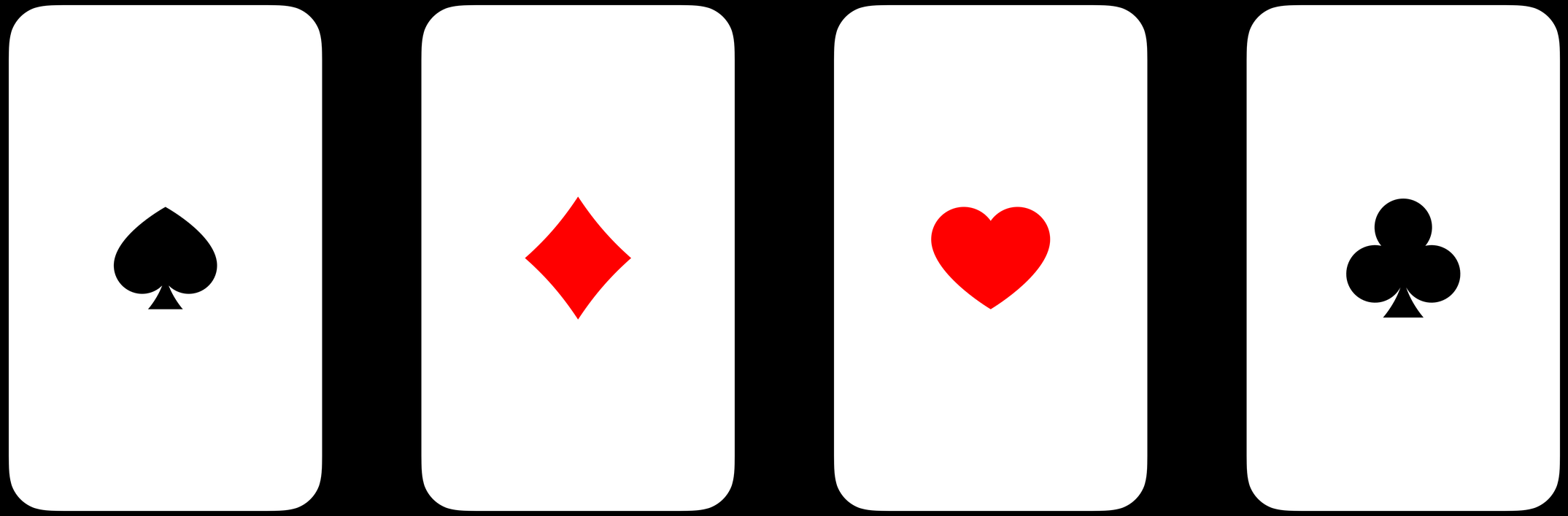

Pushups Crunches Burpees Planks

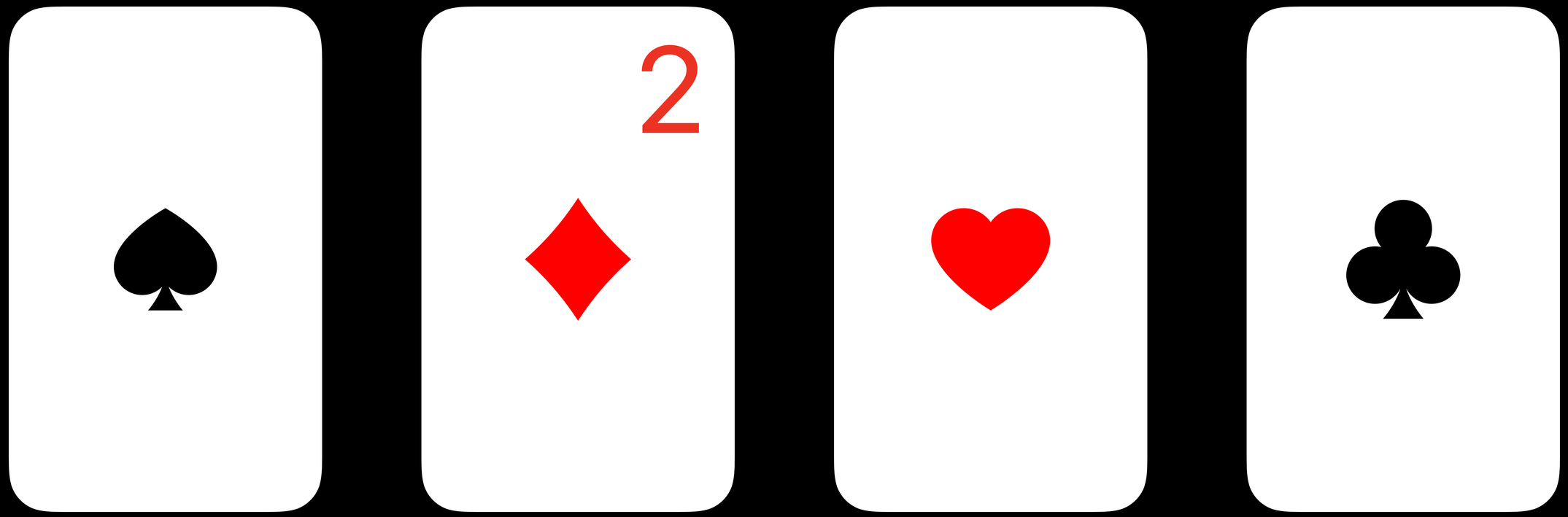

Pushups Crunches Burpees Planks

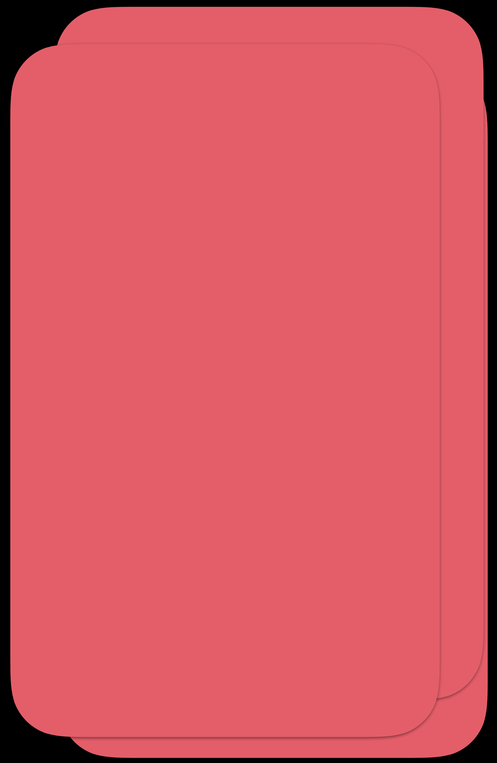

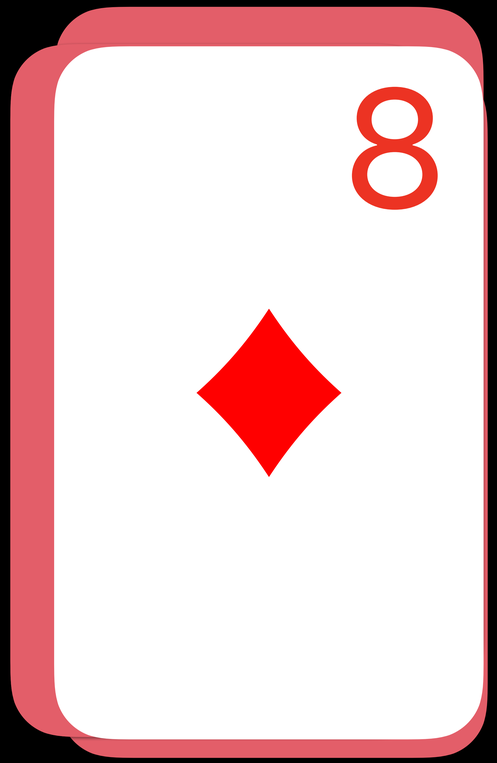
8

Progress
Best 56
DECK
OF
PAIN

“The concept using suits limited it to four exercises, and then the suits themselves became arbitrary anyway.”

Isaac Forman, Designer of Streaks Workout

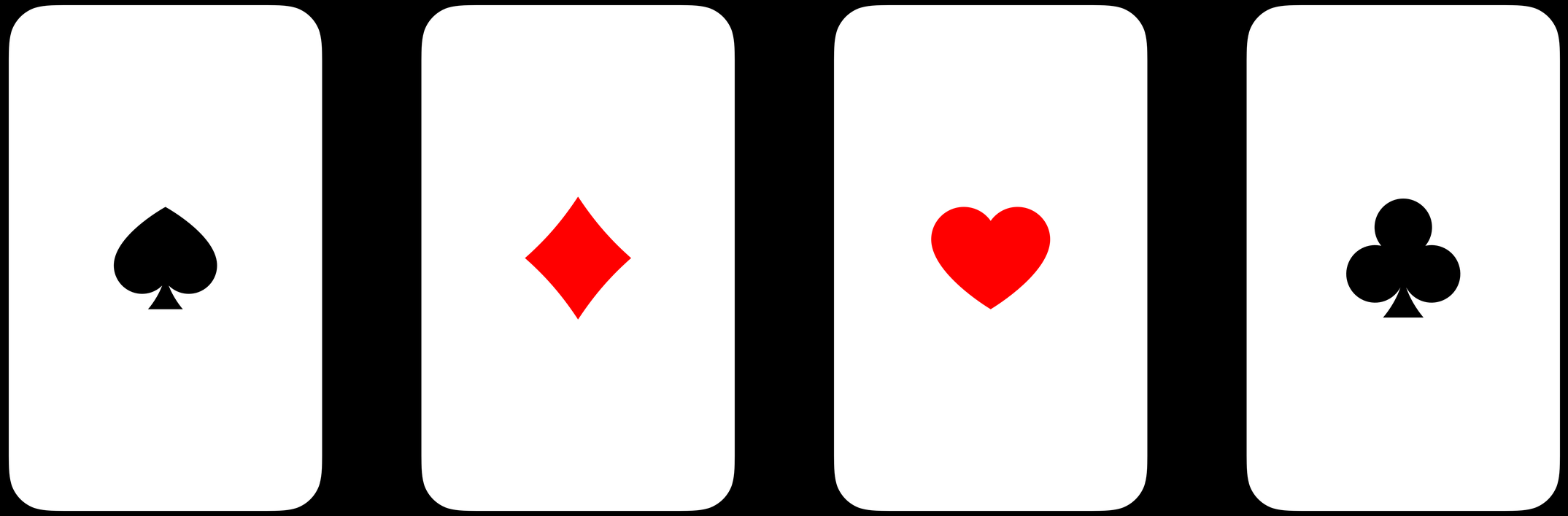

Pushups Crunches Burpees Planks

Value

Make a habit of working out

Randomness and surprise

1. Radical simplification

2. Deep understanding

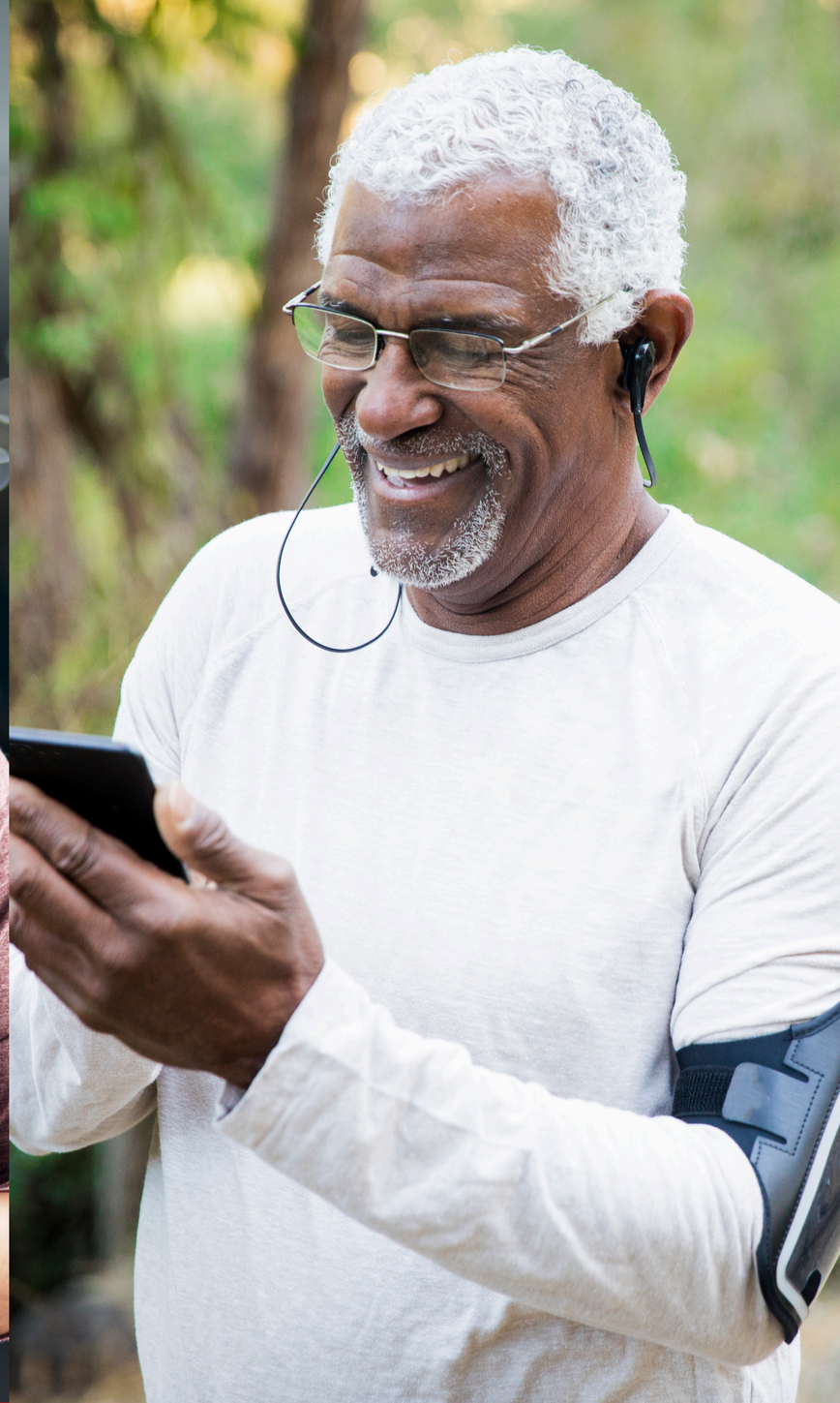

Authentic

Artificial

Distant

Get close

The Inmates Are Running The Asylum

Alan Cooper

Microsoft Visual Basic [design]

File Edit Code Run Window Help

Caption | &Open | 3480, 120 | 1095 × 375

LstView

FRMLSTVI.FRM

Object: cmdLoadFile | Proc: Click

```
Sub cmdLoadFile_Click ()
    Dim FileNum As Integer
    Dim LineRead As String
    On Error GoTo HandleError
    Do While lstContents.ListCount > 0
        lstContents.RemoveItem 0
    Loop
    'Open the File in txtInputFile.text
    FileNum = FreeFile
    Open txtInputFile.Text For Input As #FileNum
    Do Until EOF(FileNum)
        Line Input #FileNum, LineRead
        lstContents.AddItem LineRead
    Loop
    Close #FileNum
    Exit Sub
HandleError:
    MsgBox "Error:" + Error$
End Sub
```

LSTVIEW.MAK

View Form | View Code

Global.bas — Global

FRMLSTVI.FRM — frmLstView

File Manager - [C:*.*]

Knowing what people really want

United States Patent [19]

Plath

[11] **Patent Number: 4,995,487**

[45] **Date of Patent: Feb. 26, 1991**

[54] **WHEELED SUITCASE AND LUGGAGE SUPPORT**

[76] Inventor: **Robert V. Plath,** 3030 NE. 44th St, Lighthouse Point, Fla. 33064

[21] Appl. No.: **390,960**

[22] Filed: **Aug. 8, 1989**

[51] **Int. Cl.**[5] **A45C 5/14;** A45C 13/30; A45C 13/38

[52] **U.S. Cl.** ..... **190/18 A;** 190/108; 190/111; 190/115

[58] **Field of Search** ..... 190/18 A, 110, 115–117, 190/39; 150/108; 280/37

[56] **References Cited**

U.S. PATENT DOCUMENTS

2,581,417	1/1952	Jones	190/18 A X
3,199,643	8/1965	Korchmar	190/110 X
3,257,120	6/1966	Browning	190/18 A X
3,306,404	2/1967	Yellin	190/110
3,606,372	9/1971	Browning	190/115 X
3,917,038	11/1975	Foge et al.	190/18 A
4,087,102	5/1978	Sprague	190/18 A X
4,256,320	3/1981	Hager	190/18 A X
4,261,447	4/1981	Arias et al.	190/18 A
4,411,343	10/1983	Cassimally et al.	190/18 A
4,616,379	10/1986	Lio	190/117 X
4,618,035	10/1986	Mao	190/18 X
4,759,431	7/1988	King et al.	190/18 A
4,792,025	12/1988	Thomas	190/18 A

FOREIGN PATENT DOCUMENTS

3328063	2/1985	Fed. Rep. of Germany	190/18 A
2409720	7/1979	France	190/18 A
2538229	6/1984	France	190/18 A
1539021	1/1979	United Kingdom	190/18 A
2168035	6/1985	United Kingdom	190/18 A

Primary Examiner—Sue A. Weaver

Attorney, Agent, or Firm—Malin, Haley, McHale, DiMaggio & Crosby

[57] **ABSTRACT**

A luggage assembly comprising a suitcase having integrally connected thereto a laterally extendable handle at its upper end and a wheel assembly at its lower end is disclosed. To effect transport, the handle is moved from a lowered, compact, position to a raised position and the suitcase is tilted from an upright standing position to a canted position in which it is supported solely by its wheels and rolled by pulling said handle. An attachment allows for additional luggage items to be carried by the assembly and transported in a fully balanced manner.

14 Claims, 8 Drawing Sheets

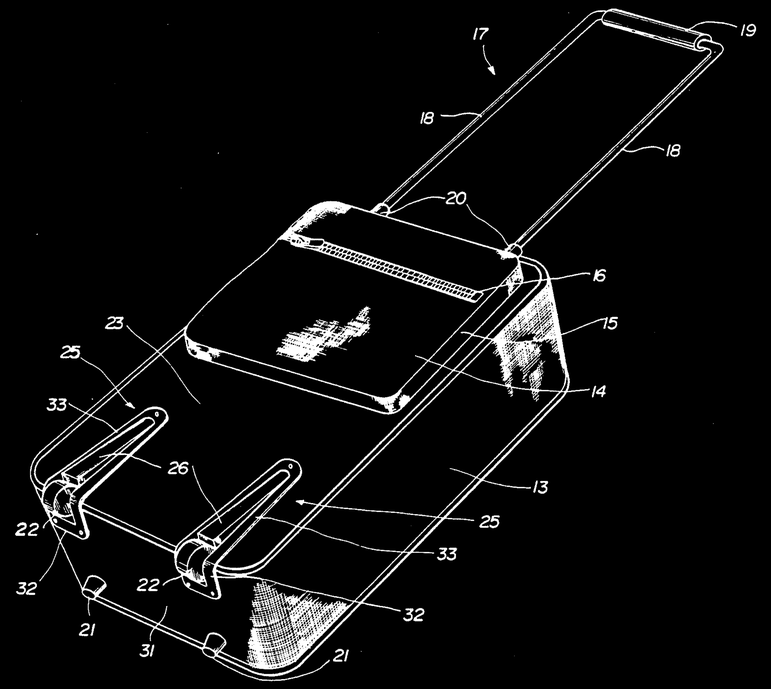

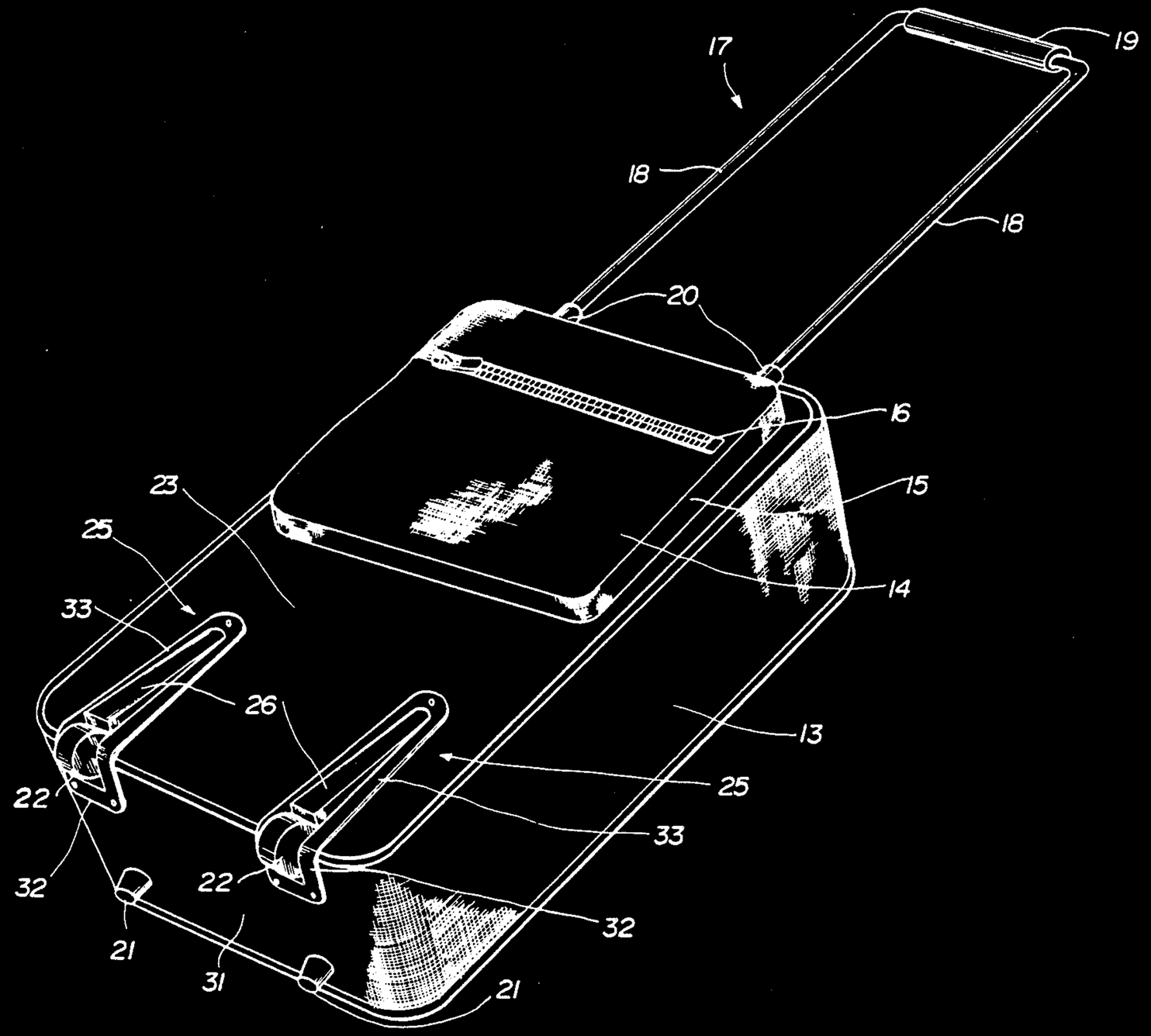
17
19
18
18
20
16
15
23
25
14
33
26
13
25
22
33
32
22
32
21
31
21

United States Patent [19]

Plath

[11] **Patent Number:**

[45] **Date of Patent:**

[54] **WHEELED SUITCASE AND LUGGAGE SUPPORT**

[76] Inventor: **Robert V. Plath,** 3030 NE. 44th St, Lighthouse Point, Fla. 33064

[21] Appl. No.: **390,960**

[22] Filed: **Aug. 8, 1989**

[51] **Int. Cl.**[5] **A45C 5/14;** A45C 13/30; A45C 13/38

[52] **U.S. Cl.** ..... **190/18 A;** 190/108; 190/111; 190/115

[58] **Field of Search** ..... 190/18 A, 110, 115–117, 190/39; 150/108; 280/37

[56] **References Cited**

U.S. PATENT DOCUMENTS

2,581,417	1/1952	Jones	190/18 A X
3,199,643	8/1965	Korchmar	190/110 X
3,257,120	6/1966	Browning	190/18 A X
3,306,404	2/1967	Yellin	190/110
4,759,431	7/1988	King et al.	
4,792,025	12/1988	Thomas	

FOREIGN PATENT D

3328063	2/1985	Fed. Rep. c
2409720	7/1979	France
2538229	6/1984	France
1539021	1/1979	United Kin
2168035	6/1985	United Kin

Primary Examiner—Sue A. Wea
Attorney, Agent, or Firm—Malin, DiMaggio & Crosby

[57] **ABSTRACT**

A luggage assembly comprising a grally connected thereto a latera at its upper end and a wheel assen disclosed. To effect transport, the a lowered, compact, position to a suitcase is tilted from an upright

United States Patent [19]

Plath

[11] **Patent Number:**

[45] **Date of Patent:**

[54] **WHEELED SUITCASE AND LUGGAGE SUPPORT**

[76] Inventor: **Robert V. Plath,** 3030 NE. 44th St, Lighthouse Point, Fla. 33064

[21] Appl. No.: **390,960**

[22] Filed: **Aug. 8, 1989**

[51] **Int. Cl.**[5] **A45C 5/14;** A45C 13/30; A45C 13/38

[52] **U.S. Cl.** ..... **190/18 A;** 190/108; 190/111; 190/115

[58] **Field of Search** ..... 190/18 A, 110, 115–117, 190/39; 150/108; 280/37

[56] **References Cited**

U.S. PATENT DOCUMENTS

2,581,417	1/1952	Jones	190/18 A X
3,199,643	8/1965	Korchmar	190/110 X
3,257,120	6/1966	Browning	190/18 A X
3,306,404	2/1967	Yellin	190/110
4,759,431	7/1988	King et al.	
4,792,025	12/1988	Thomas	

FOREIGN PATENT D

3328063	2/1985	Fed. Rep. c
2409720	7/1979	France
2538229	6/1984	France
1539021	1/1979	United Kin
2168035	6/1985	United Kin

Primary Examiner—Sue A. Wea
Attorney, Agent, or Firm—Malin, DiMaggio & Crosby

[57] **ABSTRACT**

A luggage assembly comprising a grally connected thereto a latera at its upper end and a wheel assem disclosed. To effect transport, the a lowered, compact, position to a suitcase is tilted from an upright

United States Patent [19]

Plath

[11] **Patent Number:**

[45] **Date of Patent:**

[54] **WHEELED SUITCASE AND LUGGAGE SUPPORT**

[76] Inventor: **Robert V. Plath,** 3030 NE. 44th St, Lighthouse Point, Fla. 33064

[21] Appl. No.: **390,960**

[22] Filed: **Aug. 8, 1989**

[51] **Int. Cl.**[5] **A45C 5/14;** A45C 13/30; A45C 13/38

[52] **U.S. Cl.** ..... **190/18 A;** 190/108; 190/111; 190/115

[58] **Field of Search** ..... 190/18 A, 110, 115–117, 190/39; 150/108; 280/37

[56] **References Cited**

U.S. PATENT DOCUMENTS

2,581,417	1/1952	Jones	190/18 A X
3,199,643	8/1965	Korchmar	190/110 X
3,257,120	6/1966	Browning	190/18 A X
3,306,404	2/1967	Yellin	190/110
4,759,431	7/1988	King et al.	
4,792,025	12/1988	Thomas	

FOREIGN PATENT D

3328063	2/1985	Fed. Rep.
2409720	7/1979	France
2538229	6/1984	France
1539021	1/1979	United King
2168035	6/1985	United King

Primary Examiner—Sue A. Weav
Attorney, Agent, or Firm—Malin, DiMaggio & Crosby

[57] **ABSTRACT**

A luggage assembly comprising a grally connected thereto a latera at its upper end and a wheel assem disclosed. To effect transport, the a lowered, compact, position to a suitcase is tilted from an upright

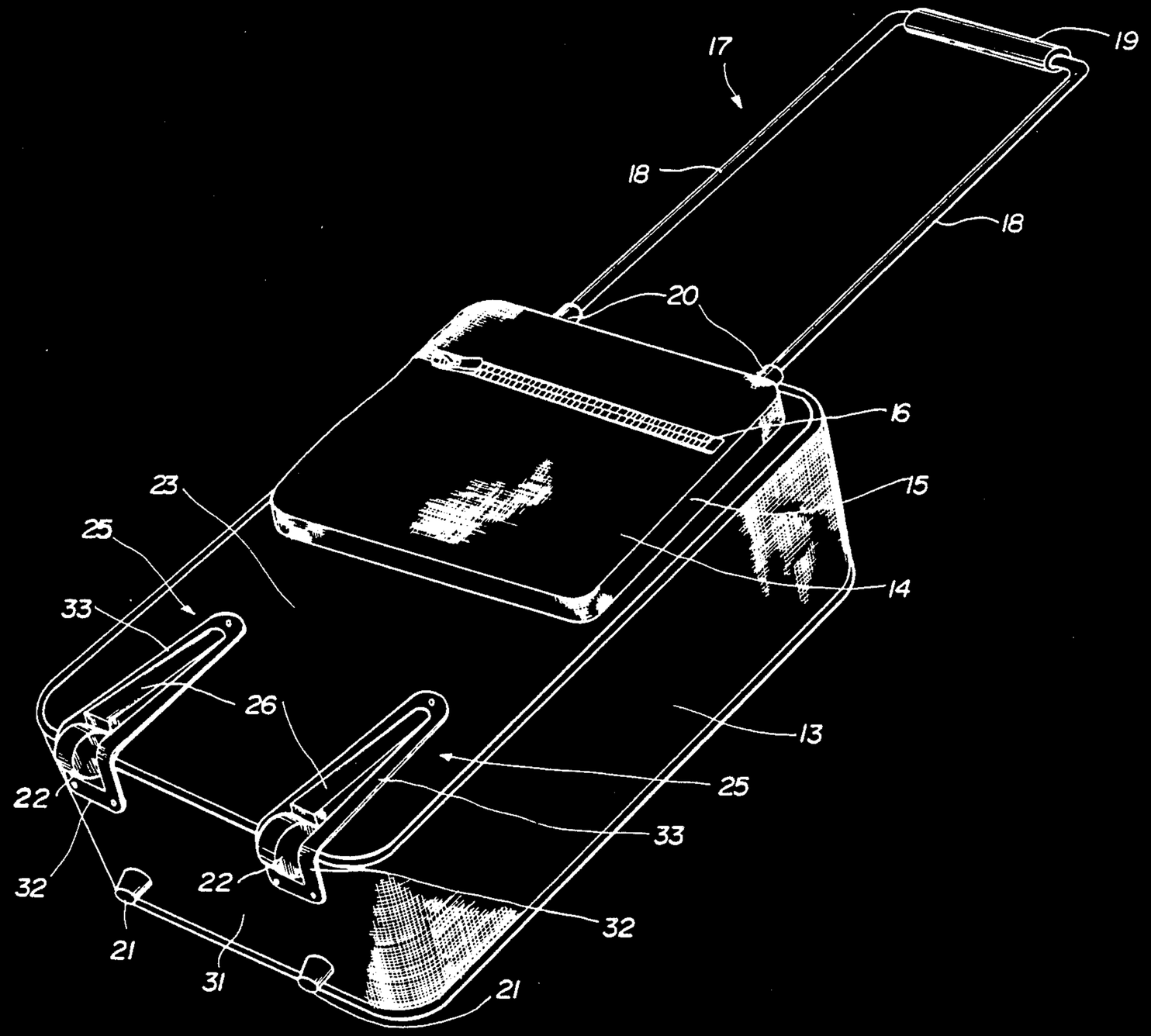
17
19
18
18
20
16
15
23
25
14
33
26
13
25
22
33
32
22
32
21
31
21

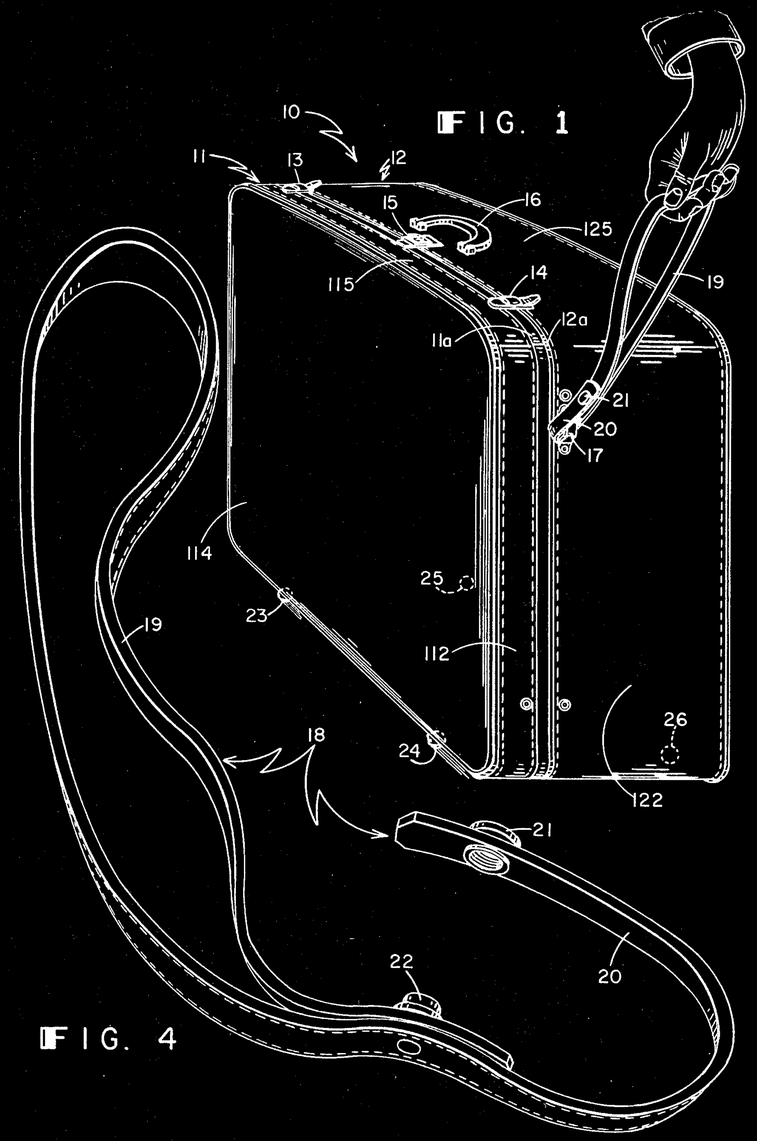
10
11
13
12
15
16
125
115
14
19
12a
11a
21
20
17
114
25
23
19
112
26
18
24
122
21
22
20

FIG. 1

FIG. 4

Jan. 15, 1946. D. A. KELLY 2,392,926

HAND LUGGAGE ATTACHMENTS

Filed July 26, 1943

Fig. 1.

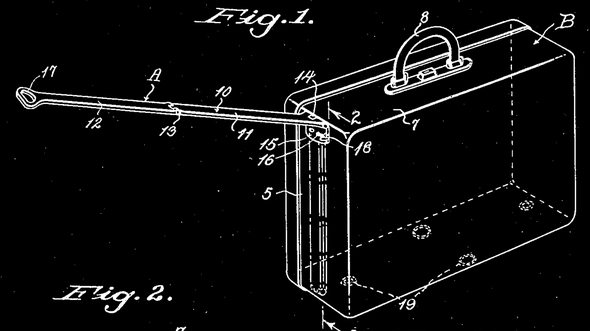

Fig. 2.

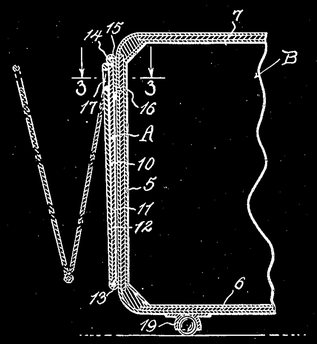

Fig. 3.

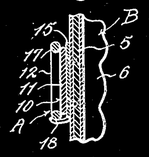

Fig. 4.

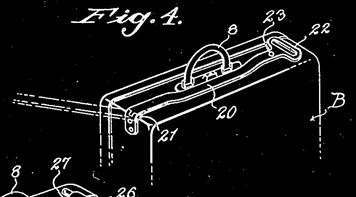

Fig. 5.

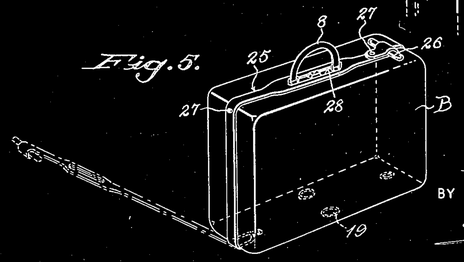

INVENTOR
DANIEL ALCOTT KELLY

BY

ATTORNEYS

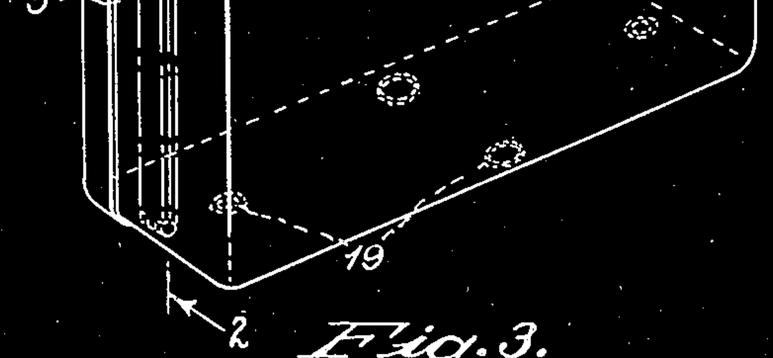

Fig. 2.

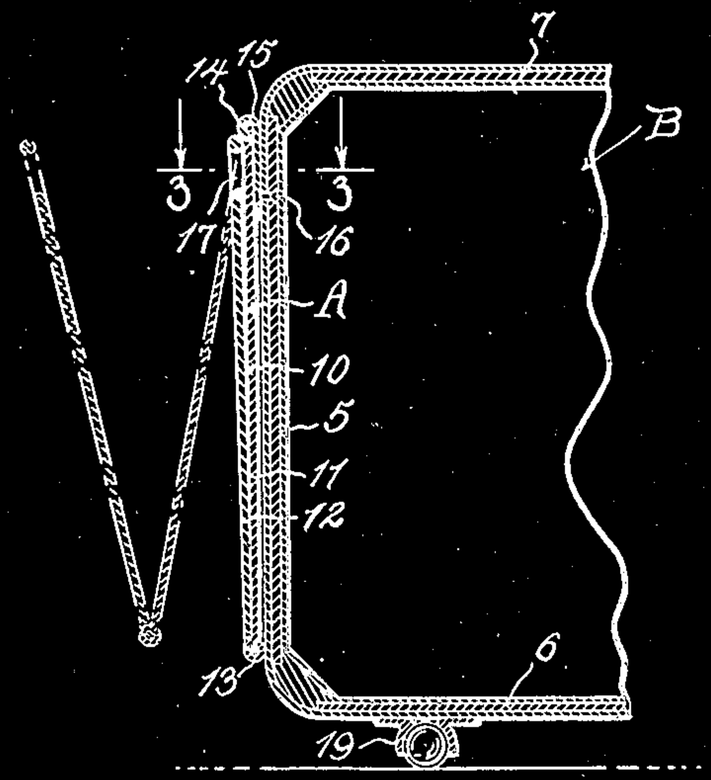

Fig. 3.

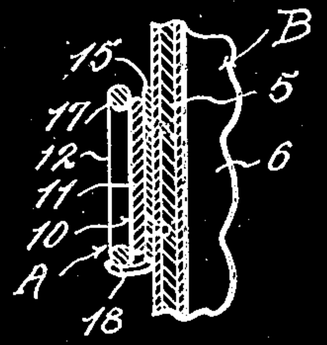

Fig. 4.

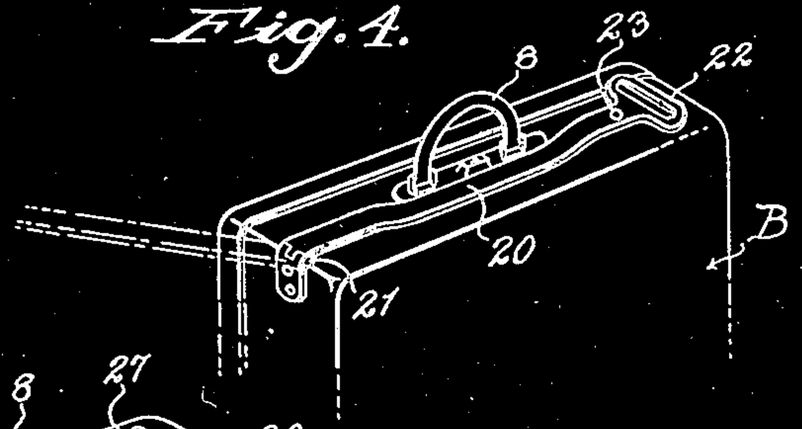

Fig. 5.

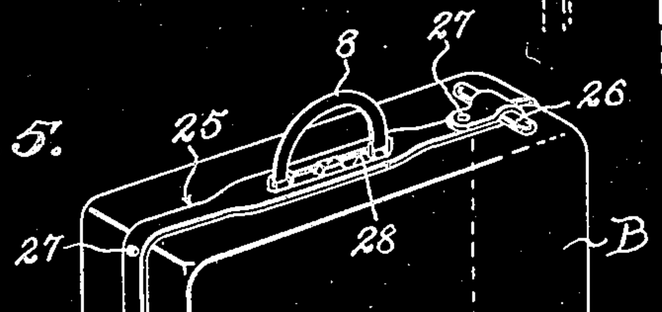

INVENTOR

Fig. 2.

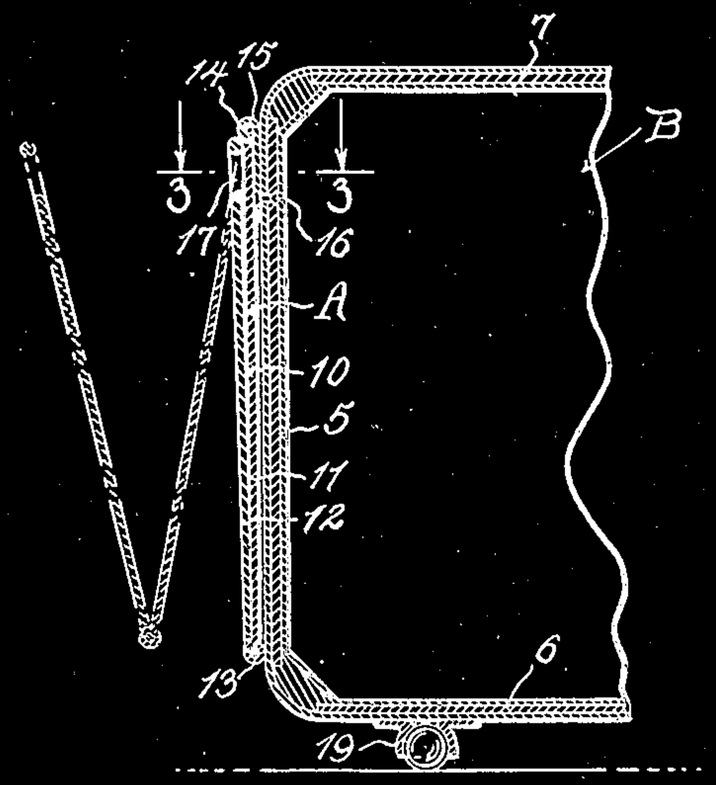

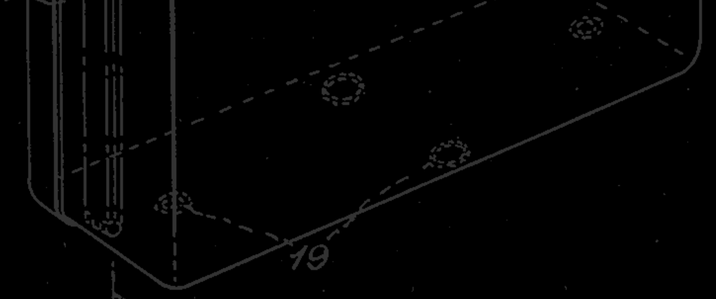

Fig. 3.

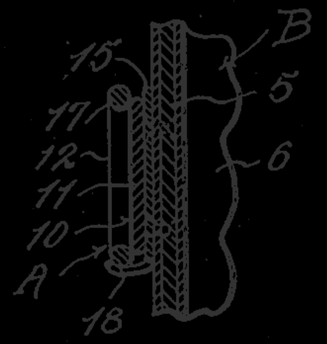

Fig. 4.

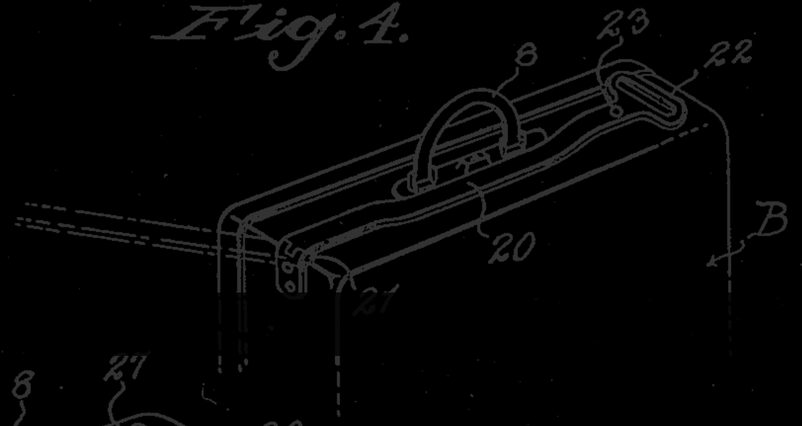

Fig. 5.

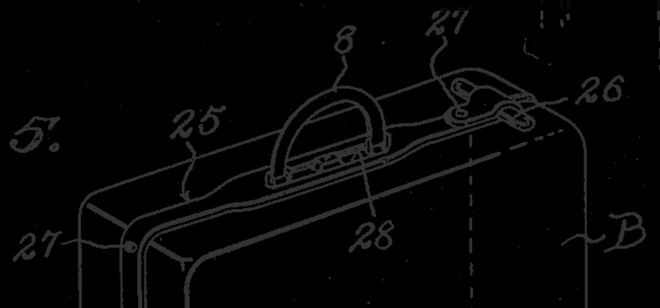

INVENTOR

Jan. 15, 1946. D. A. KELLY 2,392,926

HAND LUGGAGE ATTACHMENTS

Filed July 26, 1943

Fig. 1.

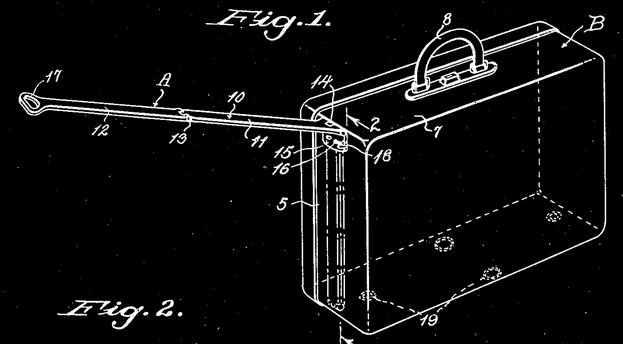

Fig. 2.

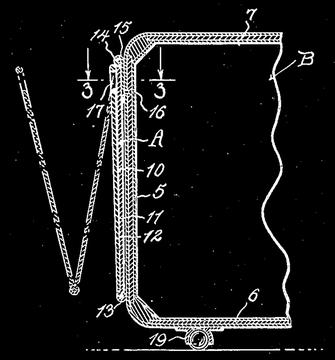

Fig. 3.

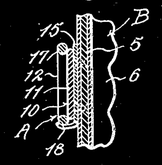

Fig. 4.

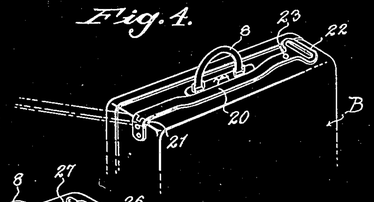

Fig. 5.

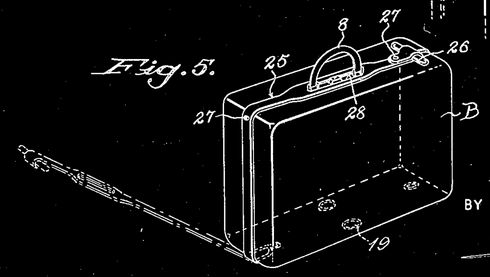

INVENTOR
DANIEL ALCOTT KELLY

BY

ATTORNEYS

Patented April 4, 1972 3,653,474

2 Sheets-Sheet 1

FIG. 1

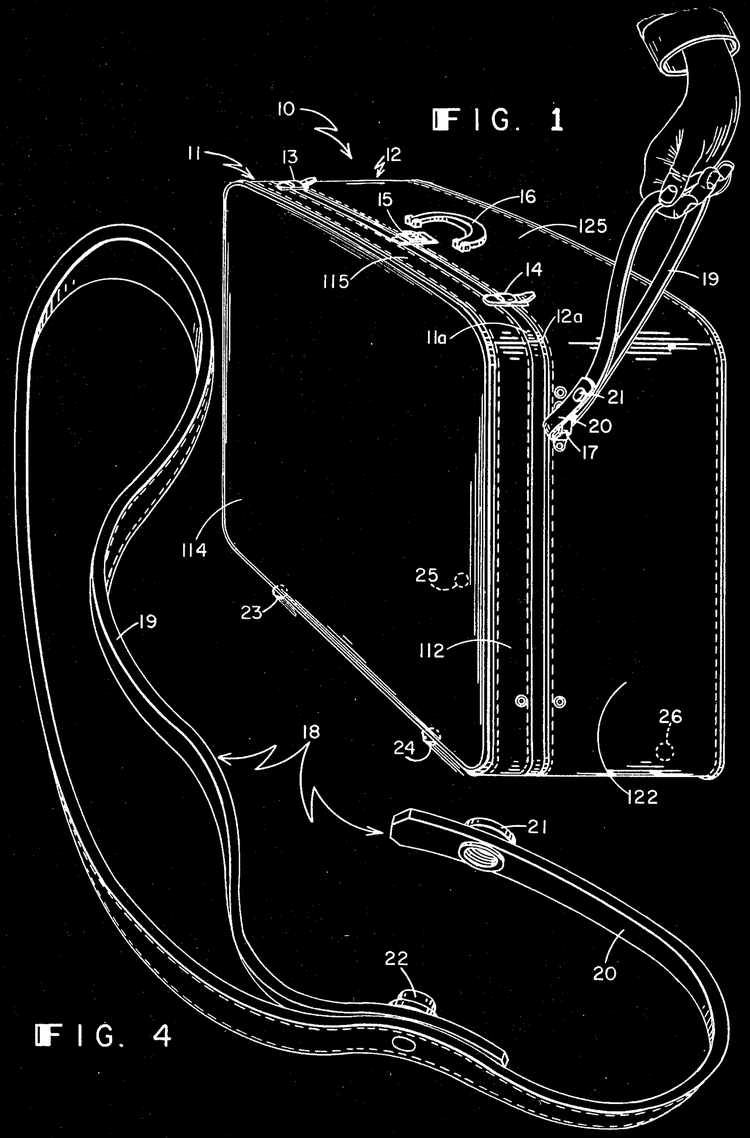

FIG. 4

FIG. 2

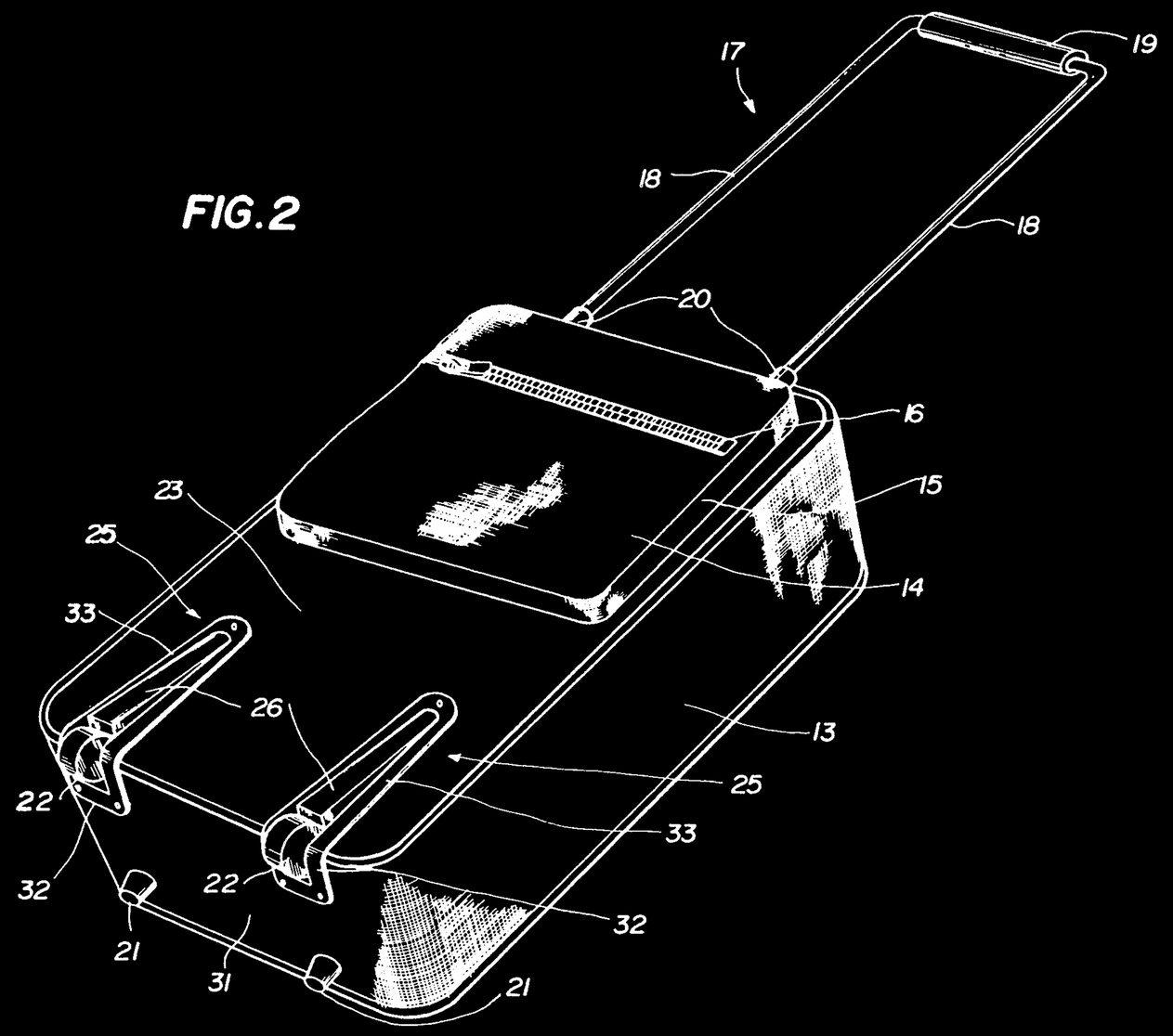

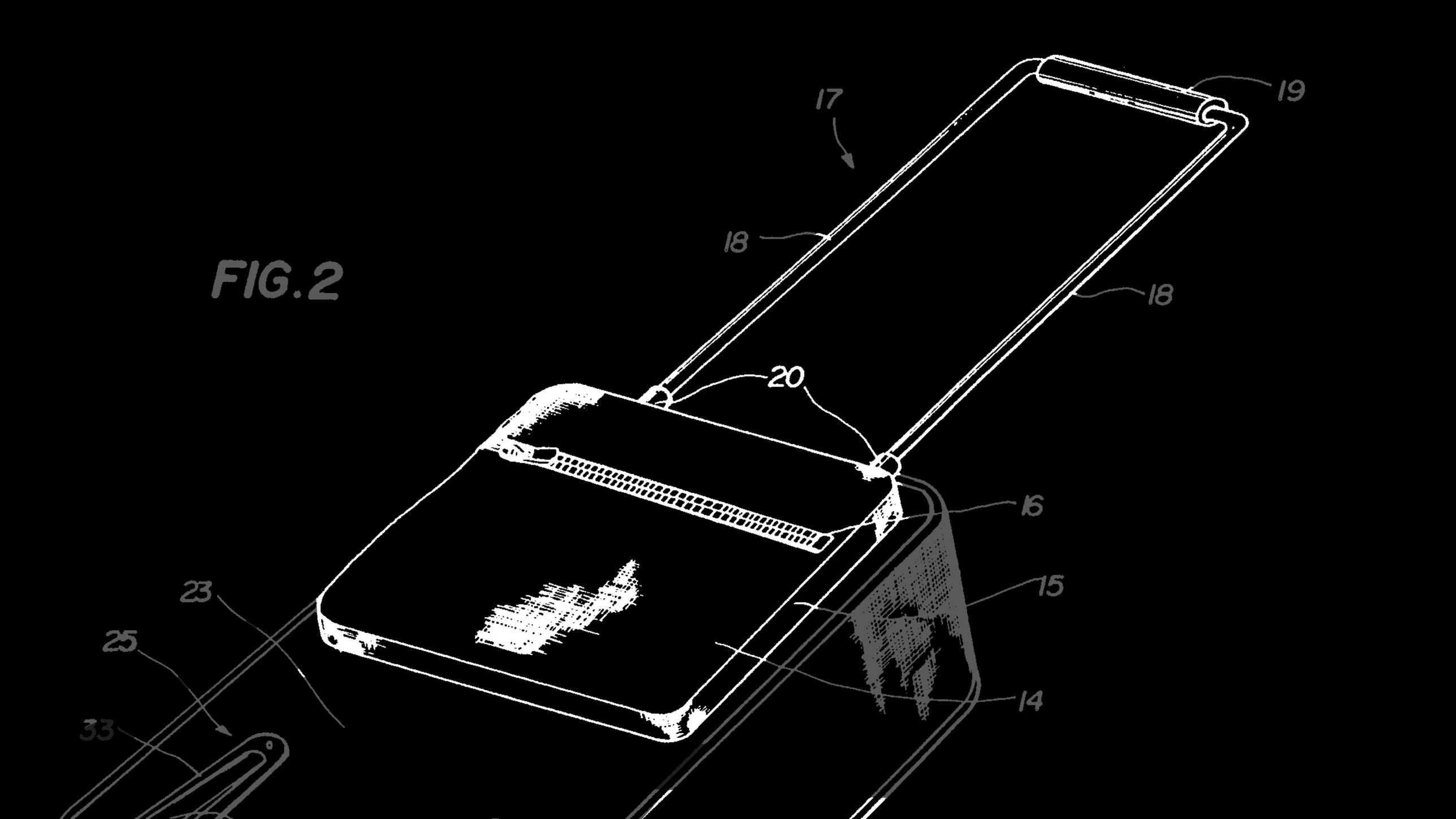
FIG. 2
17
18
18
19
20
16
15
14
23
25
33

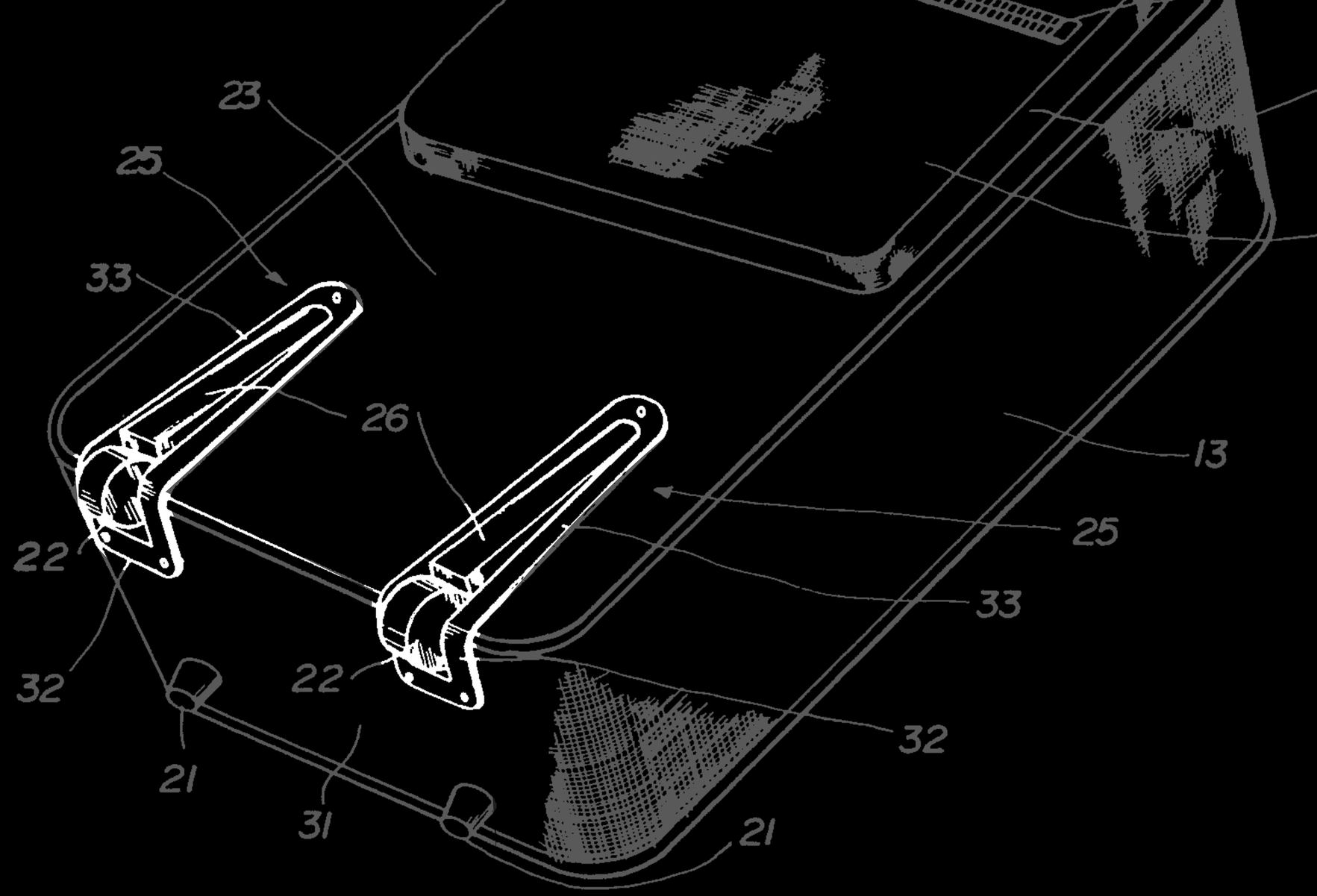
23
25
33
26
13
25
33
22
32
22
32
21
31
21

FIG. 2

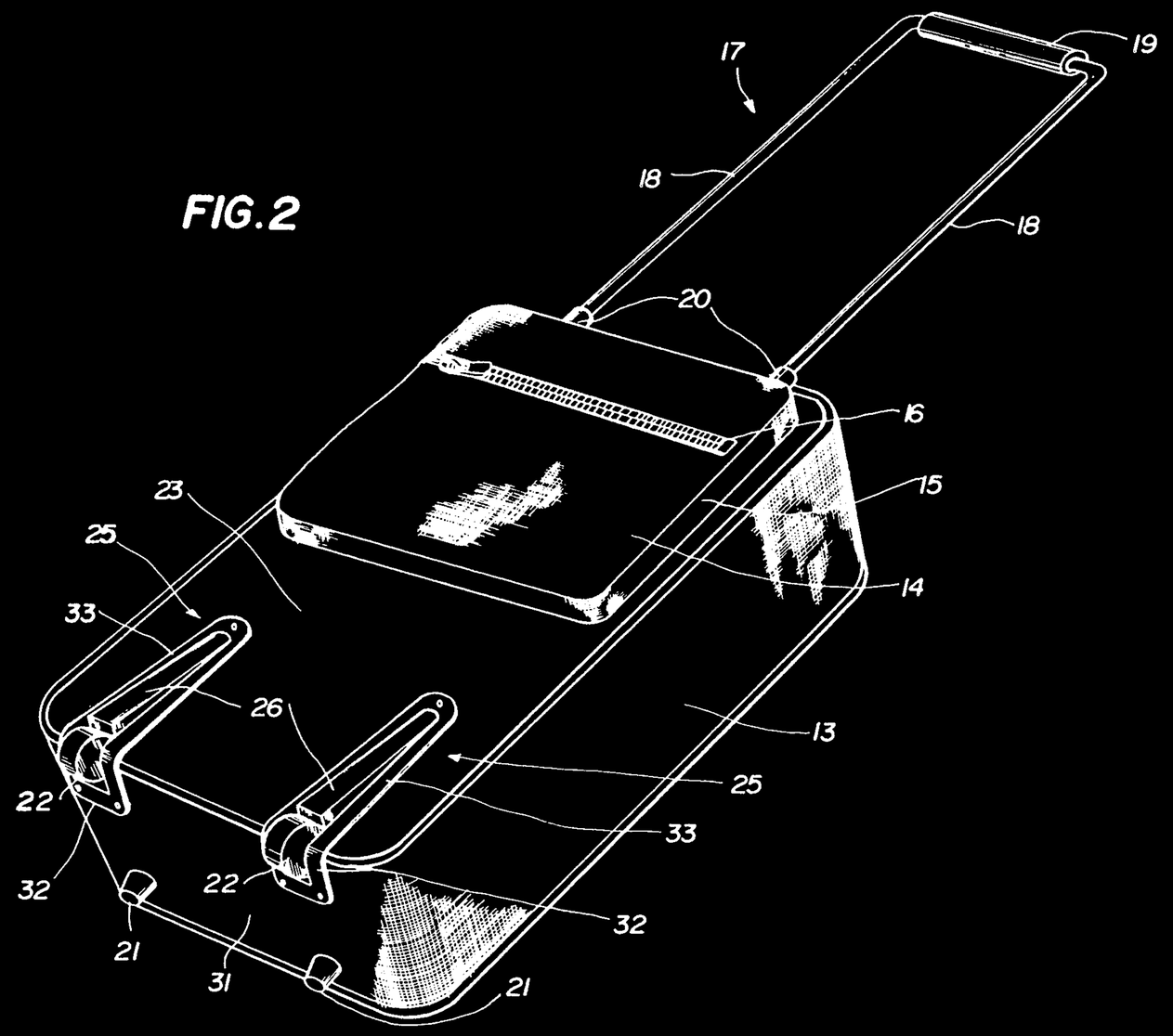

P
Exit
Lost luggage
Arrivals

100,000

Pilots and flight attendants

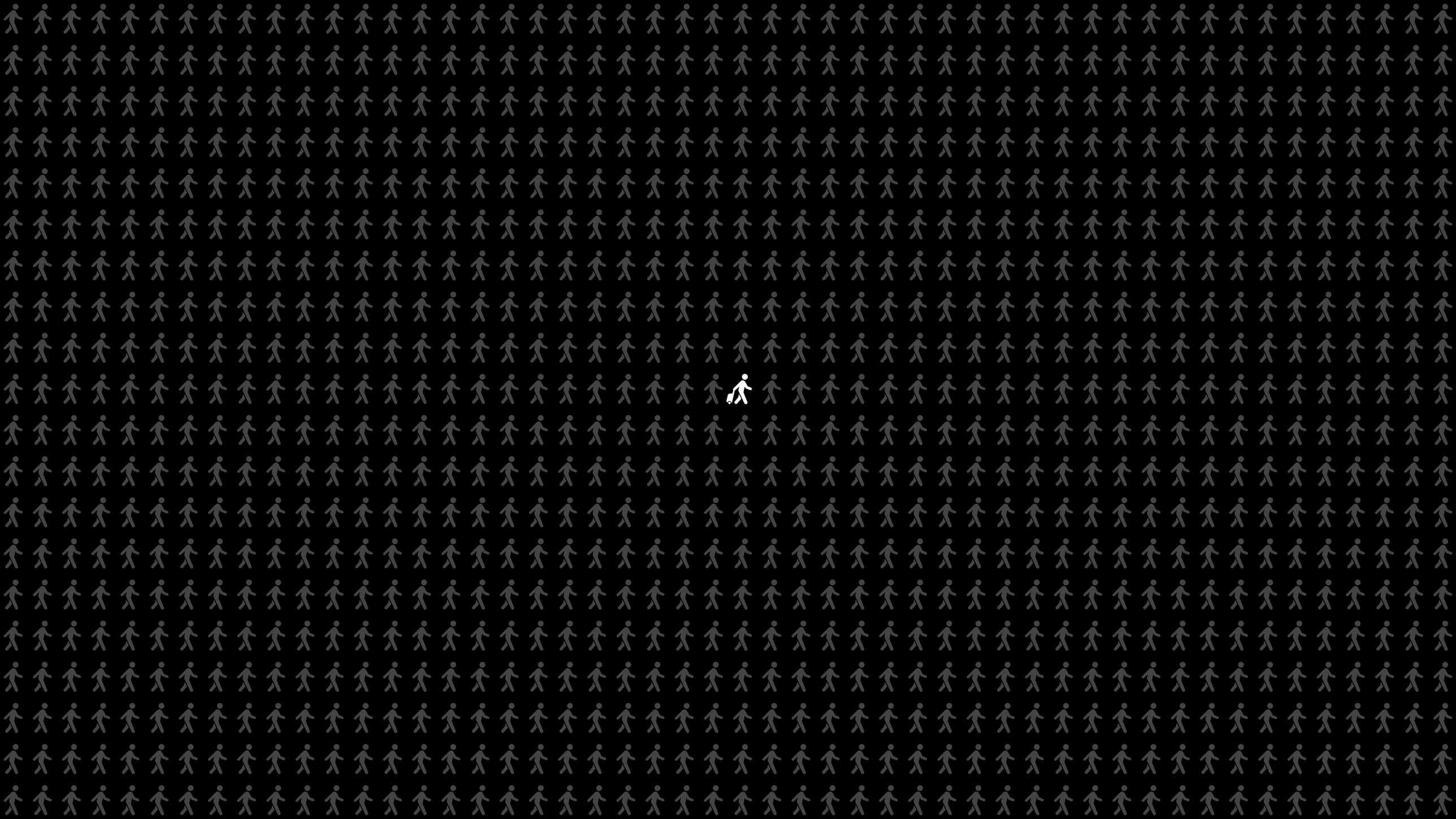

0.1%

Potential customers

Extreme

Ex·treme *ikˈstrēm/*
adjective

1. not usual; exceptional
2. furthest from the center or a given point; outermost

FIG. 2

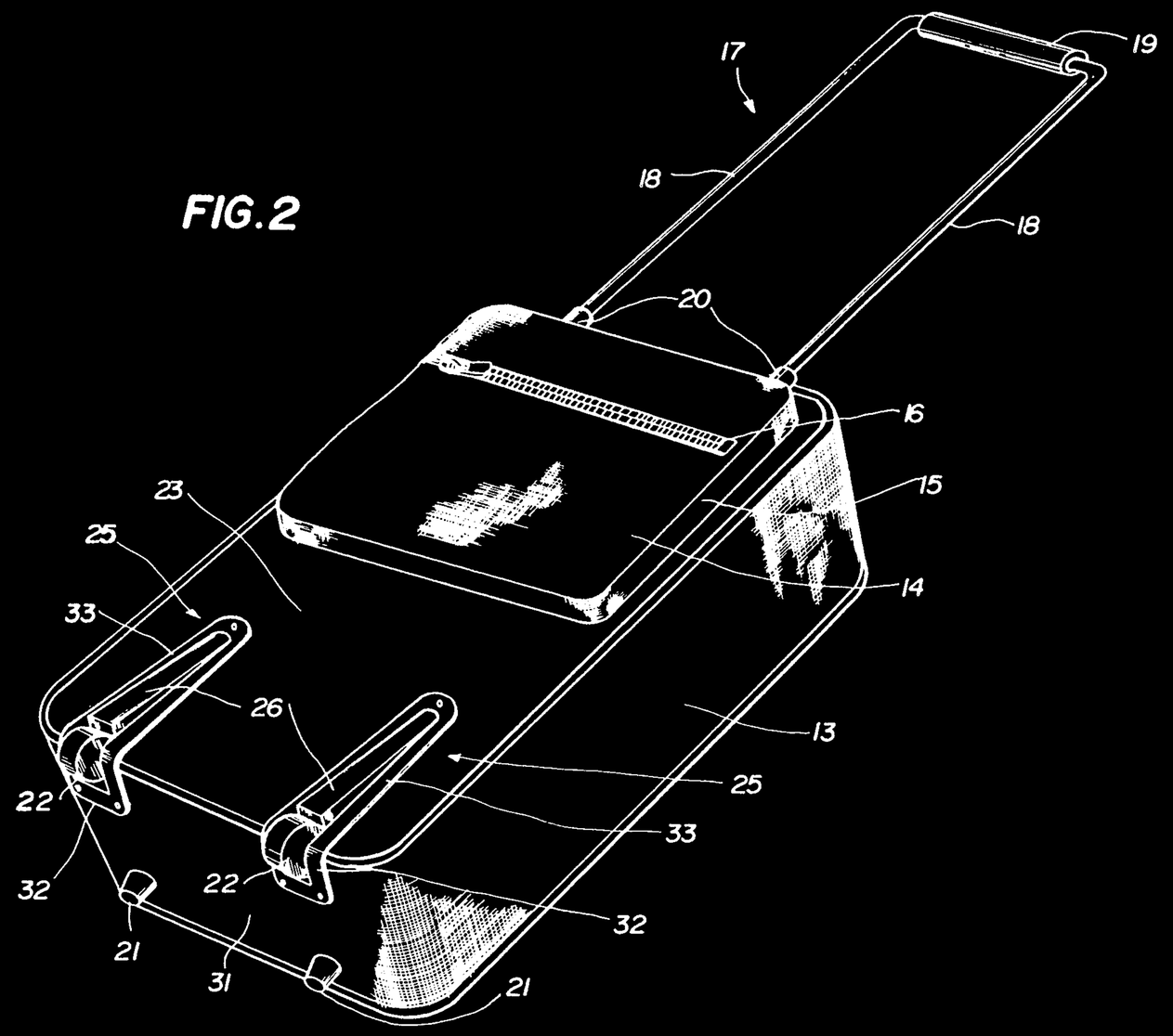

FIG. 2

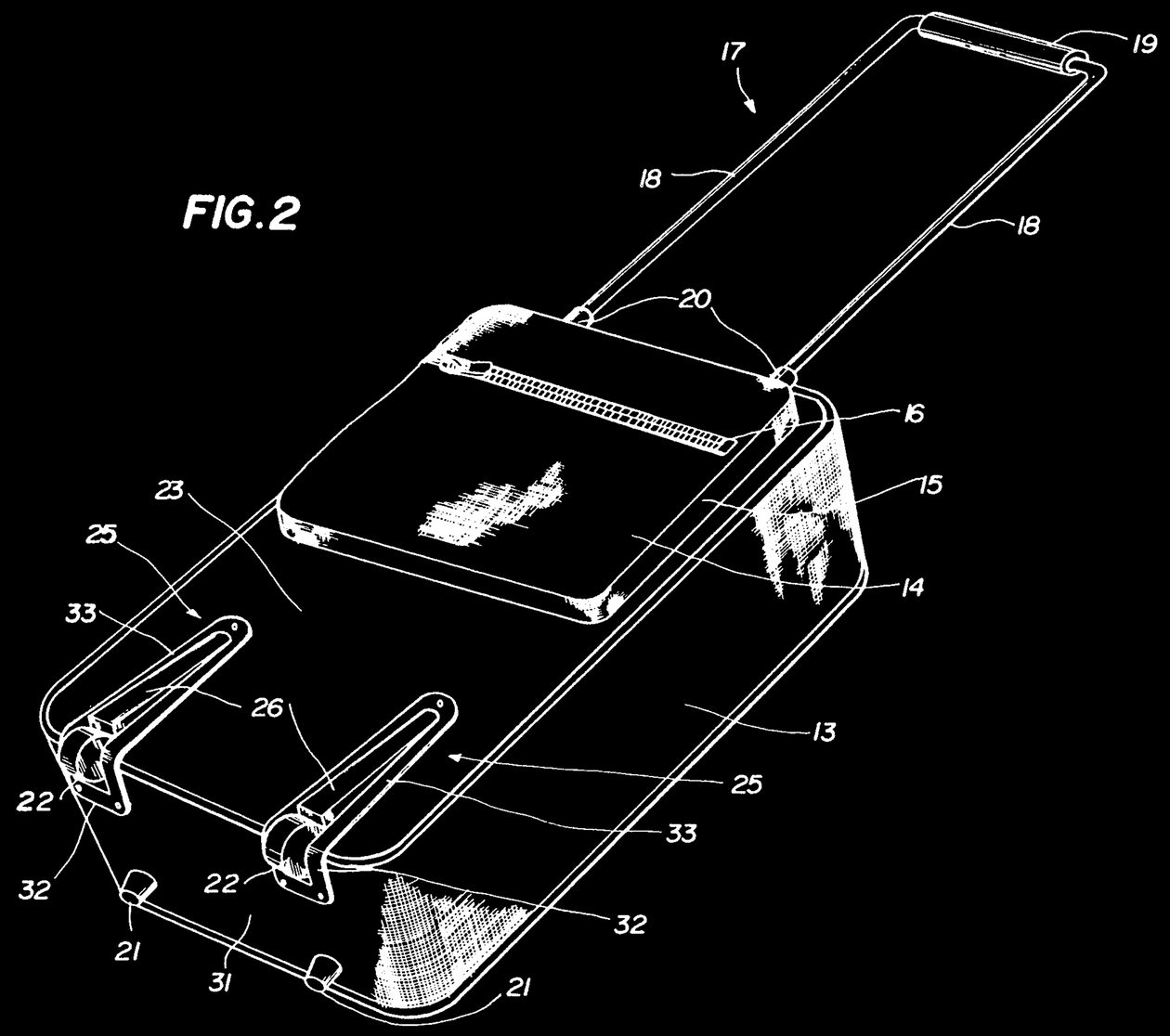

FIG. 1

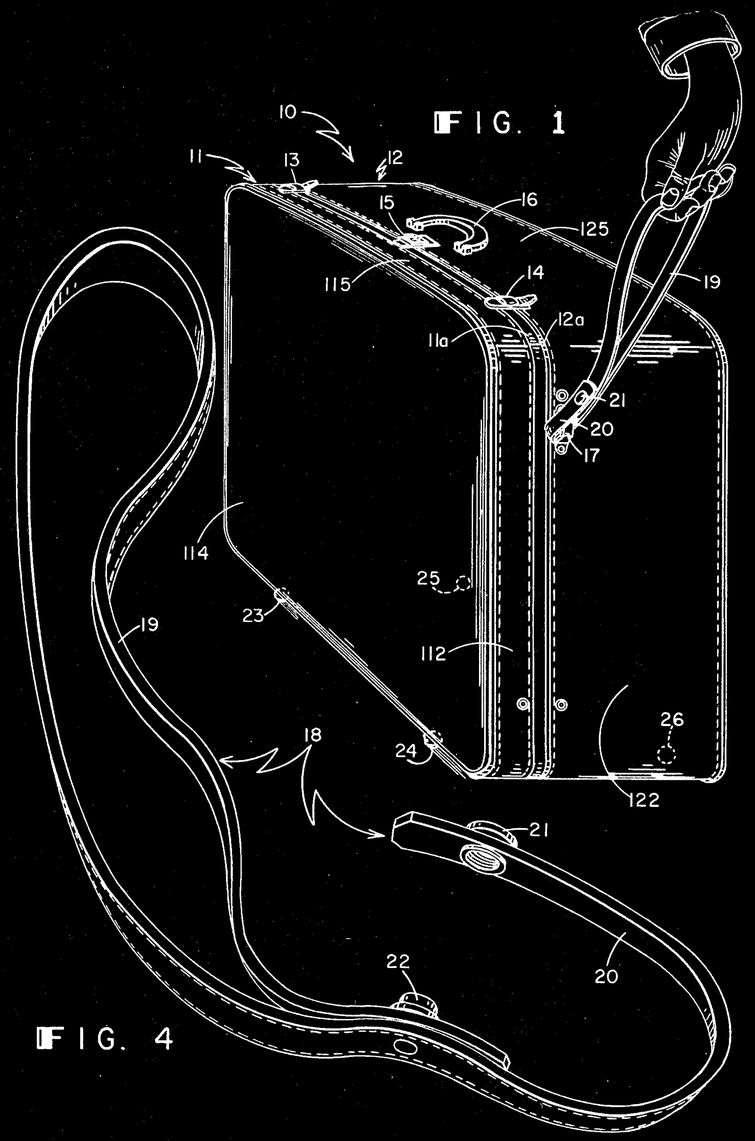

FIG. 4

SALE
?
入口
Entrance

1. Radical simplification
2. Deep understanding
3. Extreme focus

Extreme

Carrot Weather

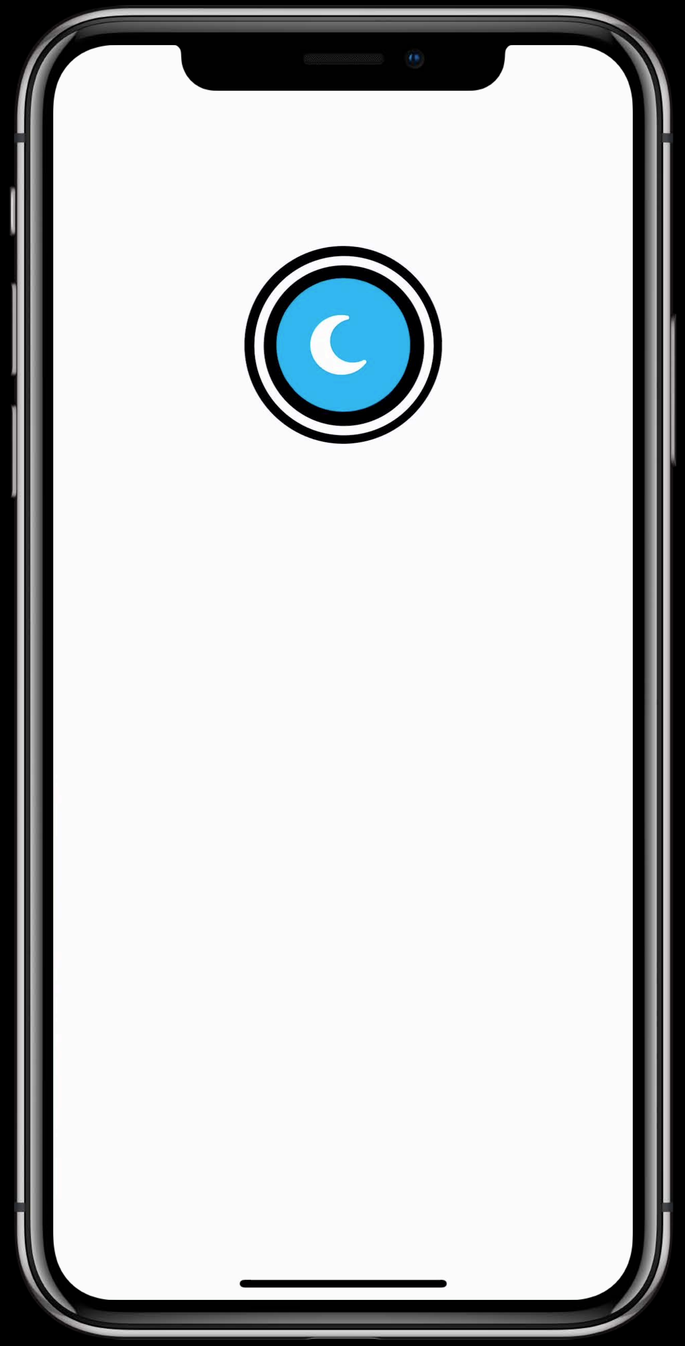

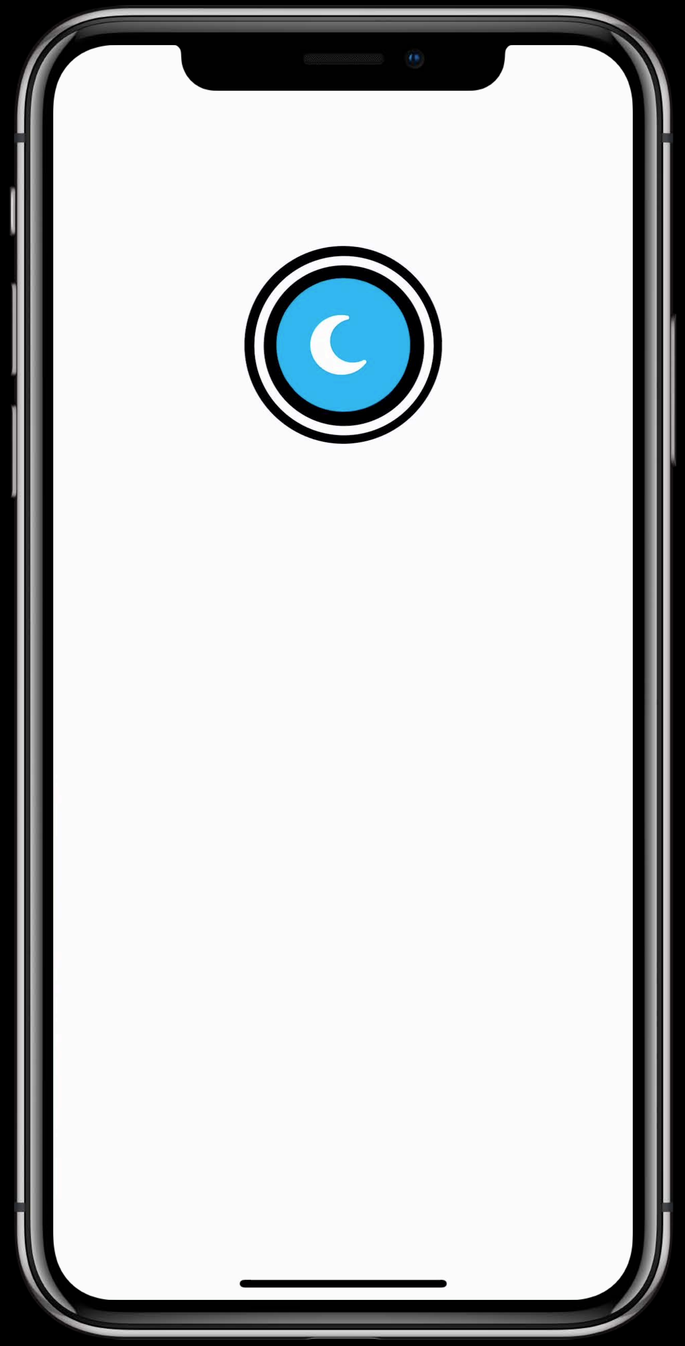

9:41
Billund, Denmark
72°
FEELS LIKE 72°
PRECIP 1%
WIND 5 (7) E
You probably think this sunshine means things are starting to look up for you. They're not.
NOW 72° 72° 1%
8 PM 72° 72° 1%
9 PM 69° 69° 1%
10 PM 66° 66° 0%
11 PM 62° 62° 0%
THURSDAY
12 AM 59° 59° 0%
1 AM 56° 56° 0%
2 AM 55° 55° 0%
TODAY 75↑ 52↓
THU 74↑ 52↓
FRI 75↑ 52↓
SAT 79↑ 52

9:41
Billund, Denmark
72°
FEELS LIKE 72°
PRECIP 1%
WIND 5 (7) E
You probably think this sunshine means things are starting to look up for you. They're not.
NOW
8 PM
9 PM
10 PM
11 PM
12 AM
1 AM
2 AM
3

9:41
Naples, Italy
65°
FEELS LIKE 65°
PRECIP 5%
WIND 12 (13) S
Anthropogenic climate change is a myth. I'm the one trying to make your planet completely uninhabitable!
NOW
8 PM
9 PM
10 PM
11 PM
12 AM
1 AM
2 AM
3

9:41
London, United Kingdom
55°
FEELS LIKE 55°
PRECIP 0%
WIND 9 (22) E
Nobody knew predicting the weather could be so complicated.
NOW
11 PM
12 AM
1 AM
2 AM
3 AM
4 AM
5 AM
6

9:41
Singapore Changi Airport
77°
FEELS LIKE 77°
PRECIP 27%
WIND 6 (6) NW
You brought this bad weather upon yourself.
NOW
2 AM
3 AM
4 AM
5 AM
6 AM
7 AM
8 AM
9 AM

9:41
Cupertino, CA
70°
FEELS LIKE 70°
PRECIP 0%
WIND 11 (10) SE
It's the perfect temperature outside, but you'll probably spend all day inside watching cat videos.
NOW
4 PM
5 PM
6 PM
7 PM
8 PM
9 PM
10 PM
11 PM

Specific and personal

Unique

9:41
Bengaluru, Karnataka, India
73°
FEELS LIKE 73°
PRECIP 6%
WIND 8 (9) N
Your local weatherman isn't anywhere near as important as he thinks he is.
NOW
THURSDAY
12 AM
1 AM
2 AM
3 AM
4 AM
5 AM
6 AM
73° 73° 6%
72° 73° 59%
73° 73° 18%
72° 72° 0%
71° 71° 0%
71° 71° 0%
71° 71° 7%
71° 71° 8%
TODAY
THU
FRI
SAT
73↑ 70↓
88↑ 70↓
86↑ 70↓
84↑ 70

Personality

1. Radical simplification
2. Deep understanding
3. Extreme focus
4. Personal connection

Memorable

“I offend a lot of people.”

Brian Mueller, designer and developer of Carrot Weather

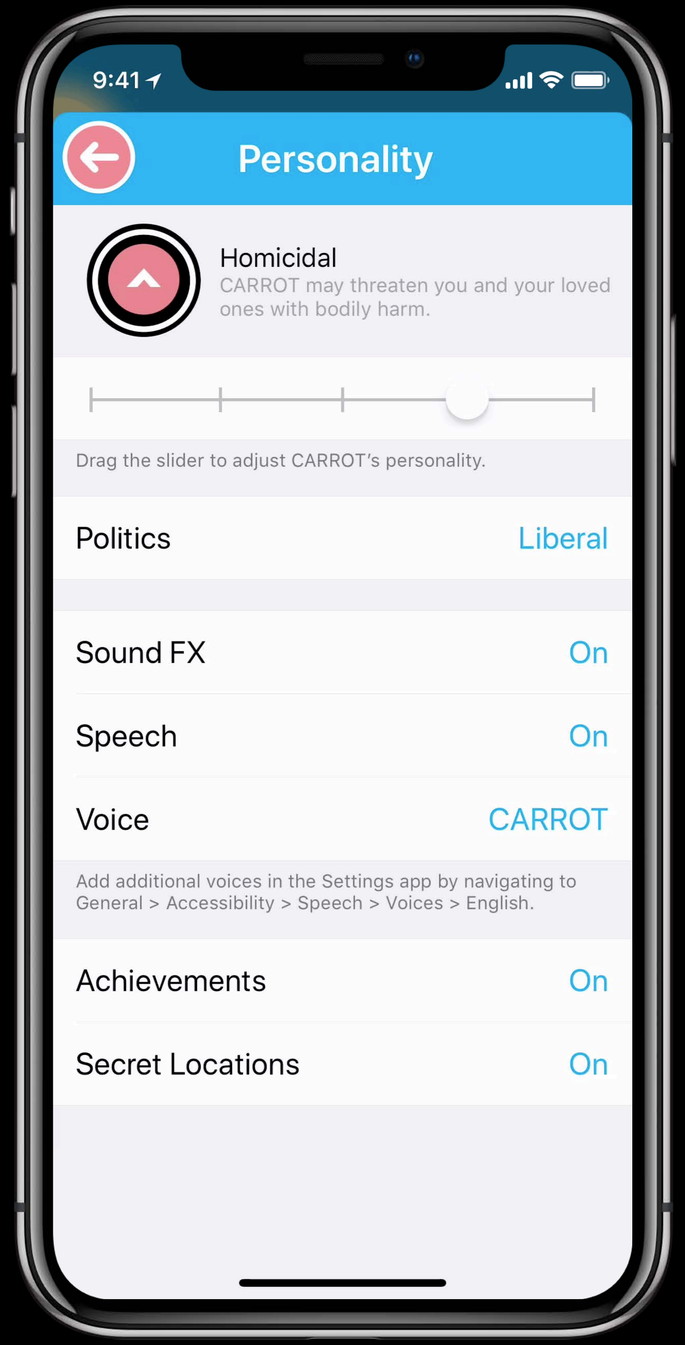
9:41
Personality
Homicidal
CARROT may threaten you and your loved ones with bodily harm.
Drag the slider to adjust CARROT's personality.
Politics
Liberal
Sound FX
On
Speech
On
Voice
CARROT
Add additional voices in the Settings app by navigating to General > Accessibility > Speech > Voices > English.
Achievements
On
Secret Locations
On

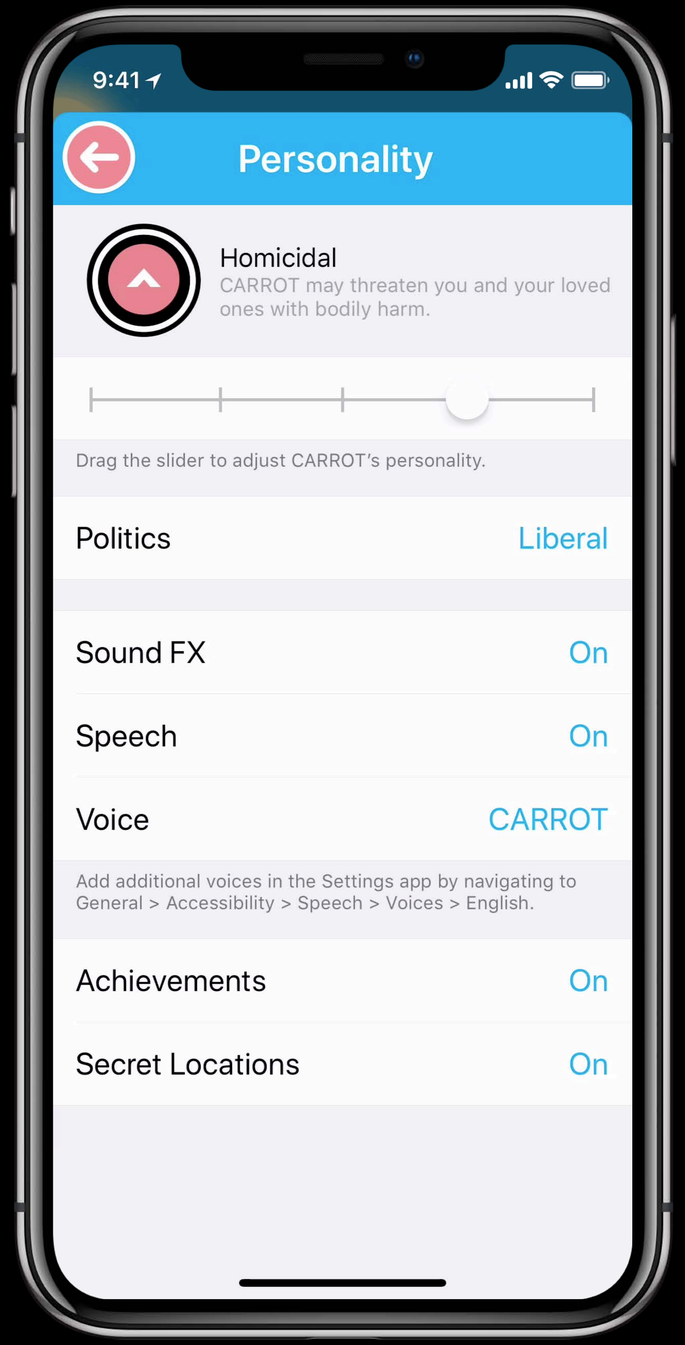
9:41
Personality
Homicidal
CARROT may threaten you and your loved ones with bodily harm.
Drag the slider to adjust CARROT's personality.
Politics
Liberal
Sound FX
On
Speech
On
Voice
CARROT
Add additional voices in the Settings app by navigating to General > Accessibility > Speech > Voices > English.
Achievements
On
Secret Locations
On

9:41
Gander, NL, Canada
32°
FEELS LIKE 23°
PRECIP 68% •
WIND 12 (24) N
I command you to build a snowman in my image.
NOW
9 PM
10 PM
11 PM
THURSDAY
12 AM
1 AM
2 AM
3 AM
32° 23°
32° 22°
31° 21°
30° 21°
31° 22°
31° 22°
31° 22°
30° 20°
68%
19%
24%
45%
71%
95%
96%
94%
TODAY
THU
FRI
SAT
45↑ 28↓
34↑ 25↓
43↑ 34↓
39↑ 32

9:41
Gander, NL, Canada
32°
FEELS LIKE 23°
PRECIP 68% •
WIND 12 (24) N
I command you to build a snowman in my image.
NOW
9 PM
10 PM
11 PM
THURSDAY
12 AM
1 AM
2 AM
3 AM
32° 23°
32° 22°
31° 21°
30° 21°
31° 22°
31° 22°
31° 22°
30° 20°
68%
19%
24%
45%
71%
95%
96%
94%
TODAY
THU
FRI
SAT
45↑ 28↓
34↑ 25↓
43↑ 34↓
39↑ 32

Personal connection

1. Radical simplification
2. Deep understanding
3. Extreme focus
4. Personal connection

Unintentional design

Where does bad UI come from?

Our experience

Familiar patterns

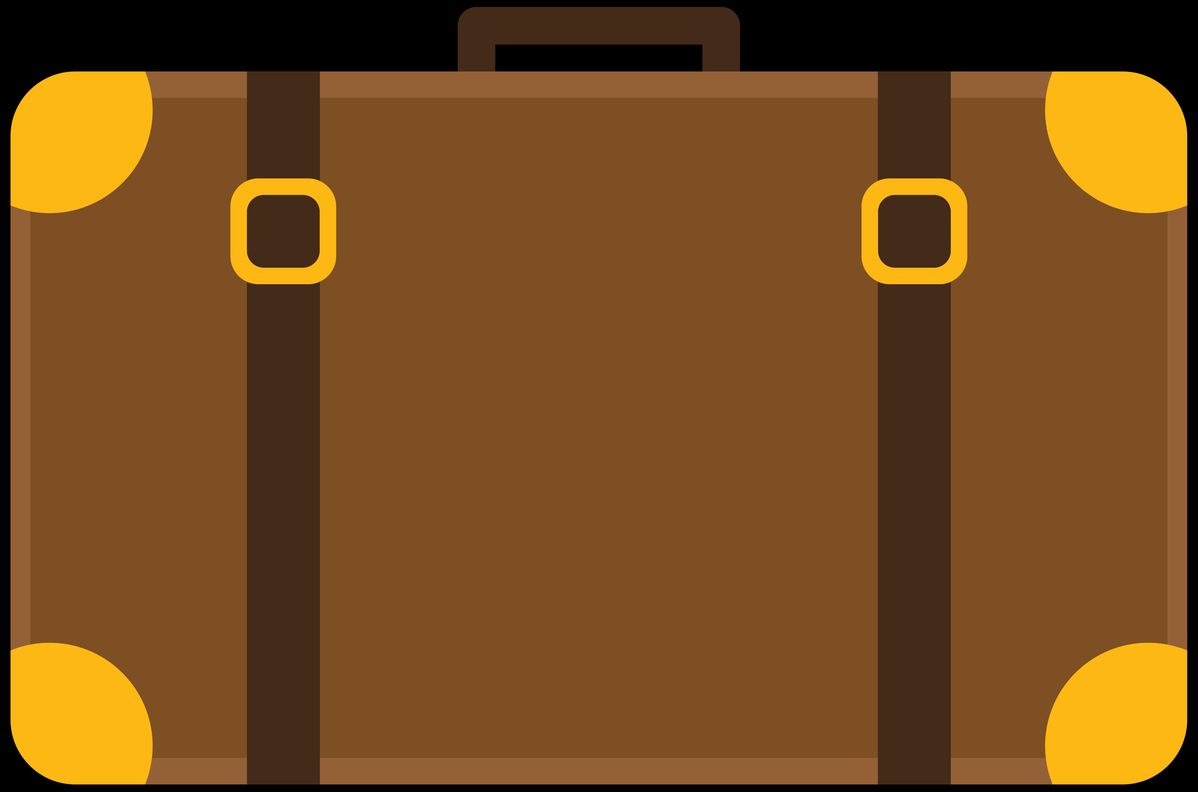

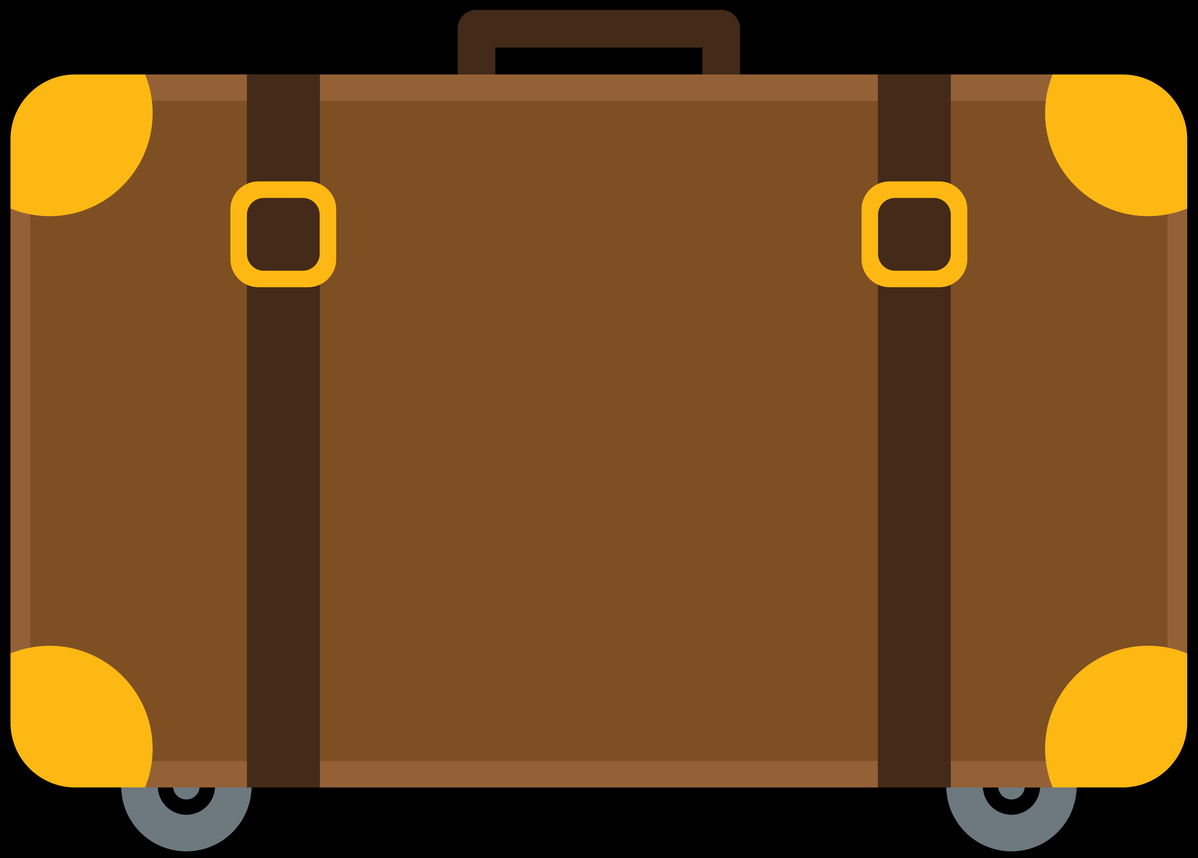

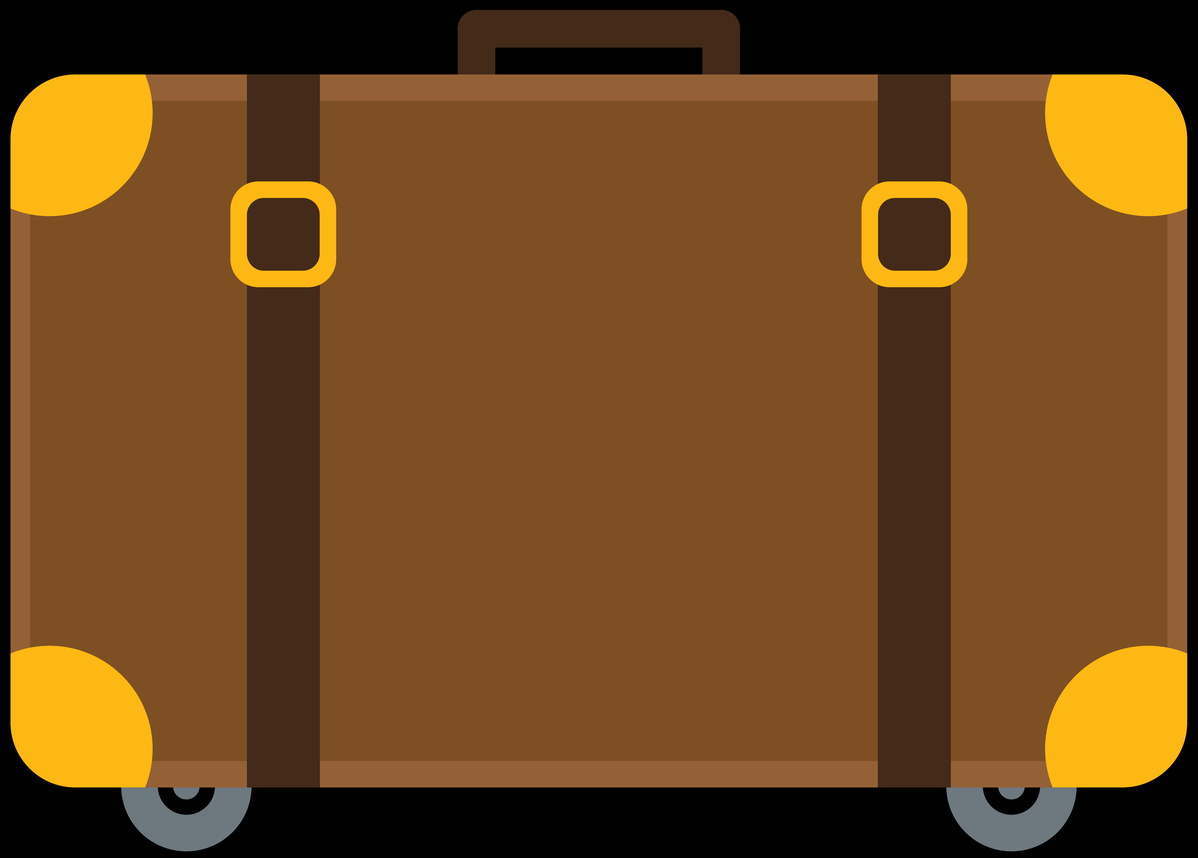

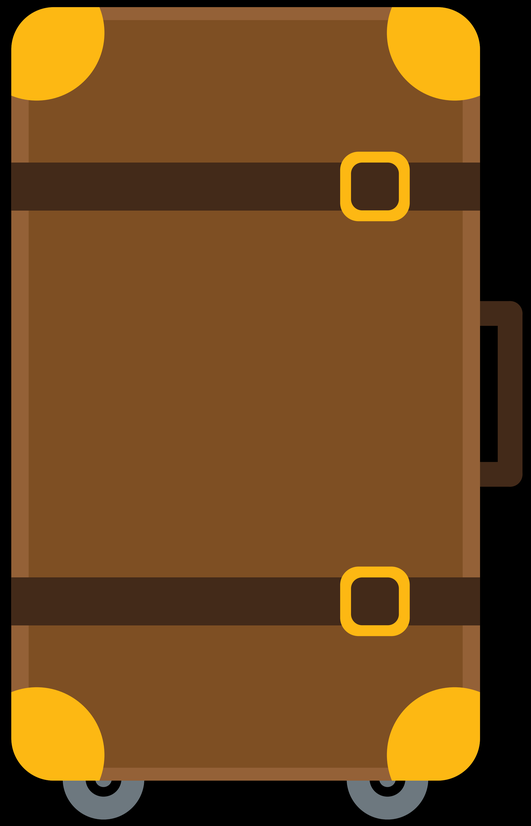

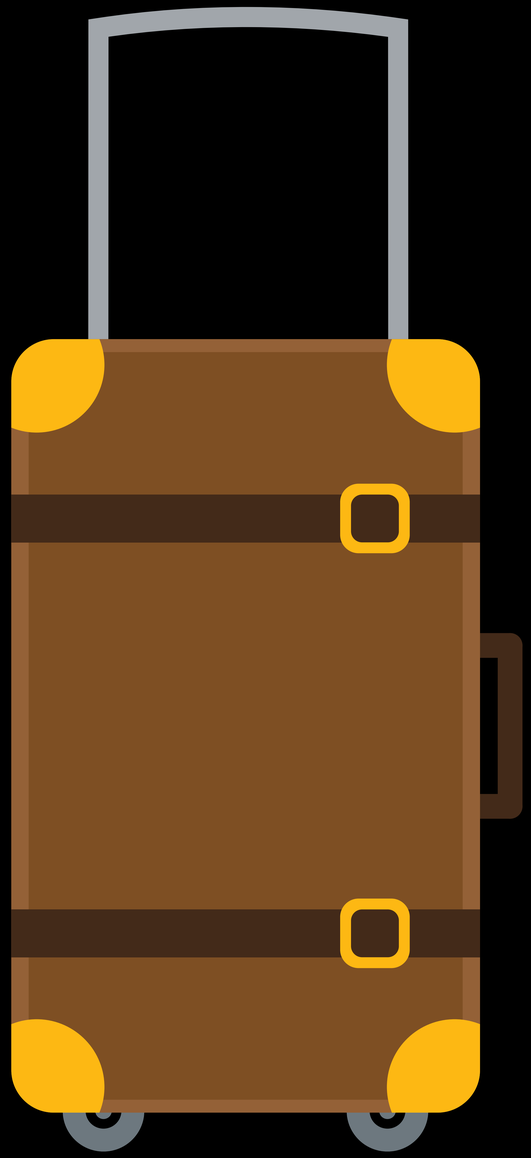

Automatic, unconscious, and fast

Notice the obvious

Challenge the obvious

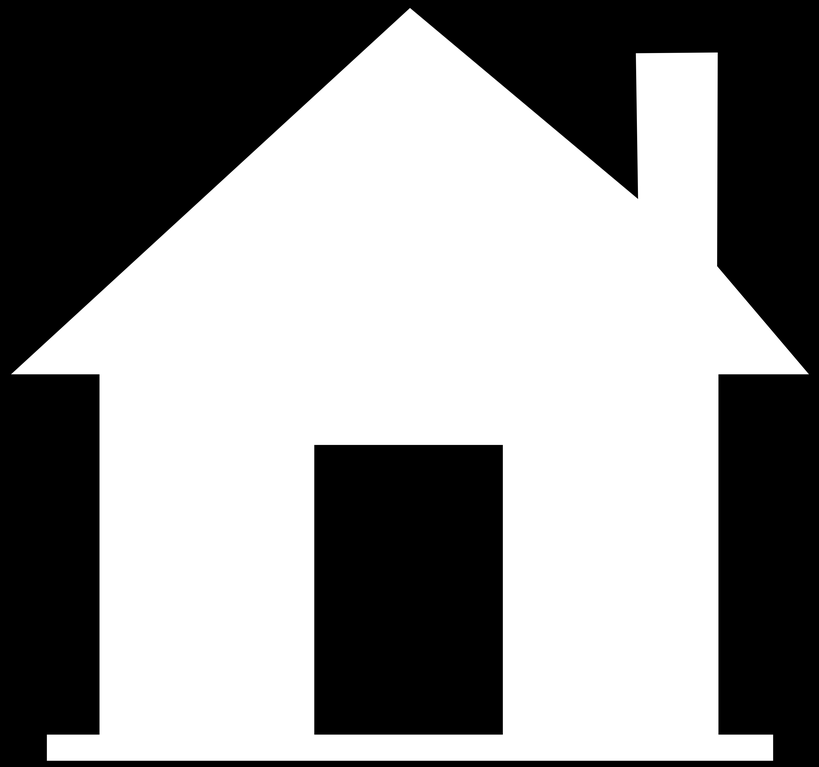

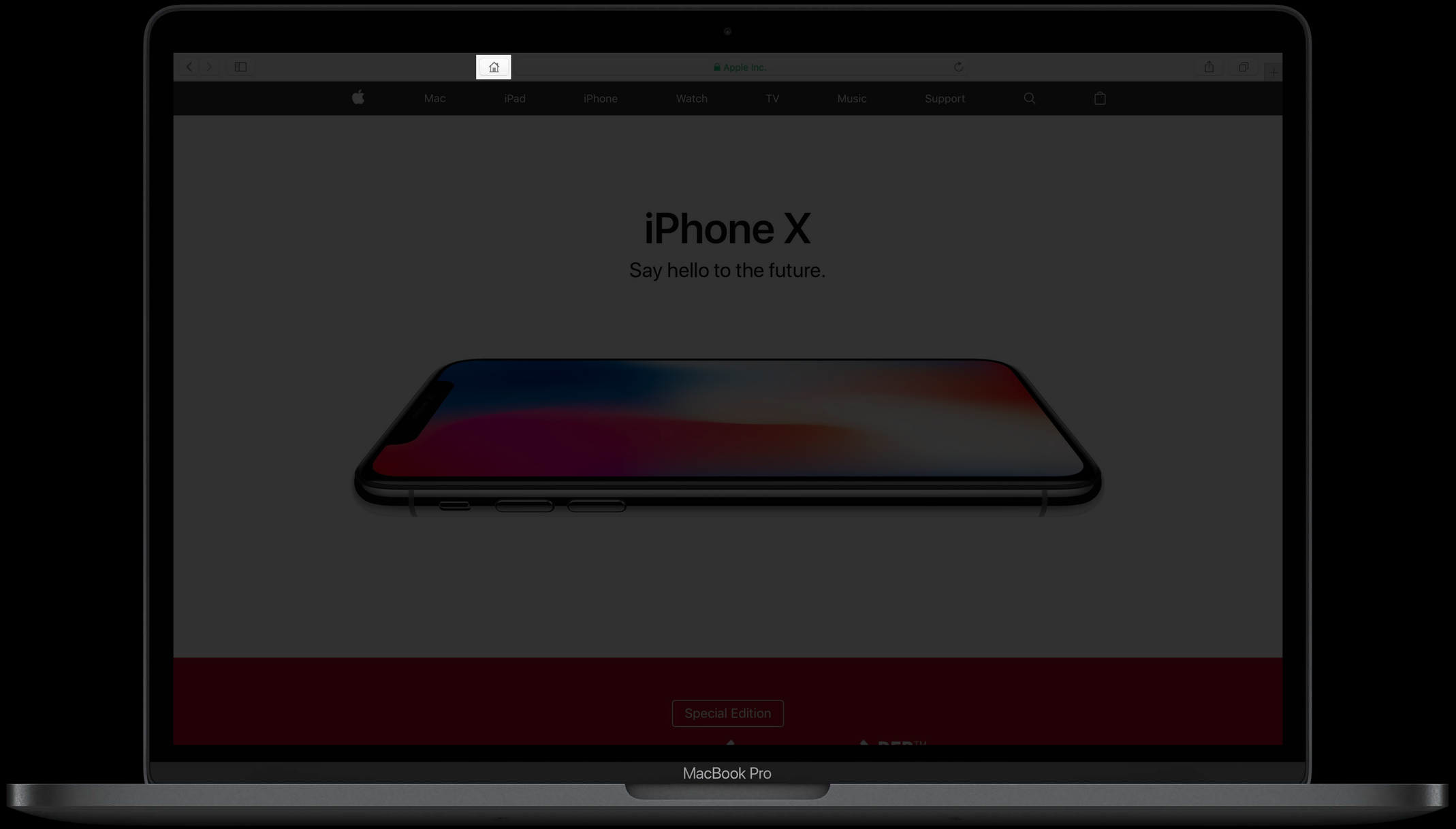
Apple Inc.
Mac
iPad
iPhone
Watch
TV
Music
Support
iPhone X
Say hello to the future.
Special Edition
MacBook Pro

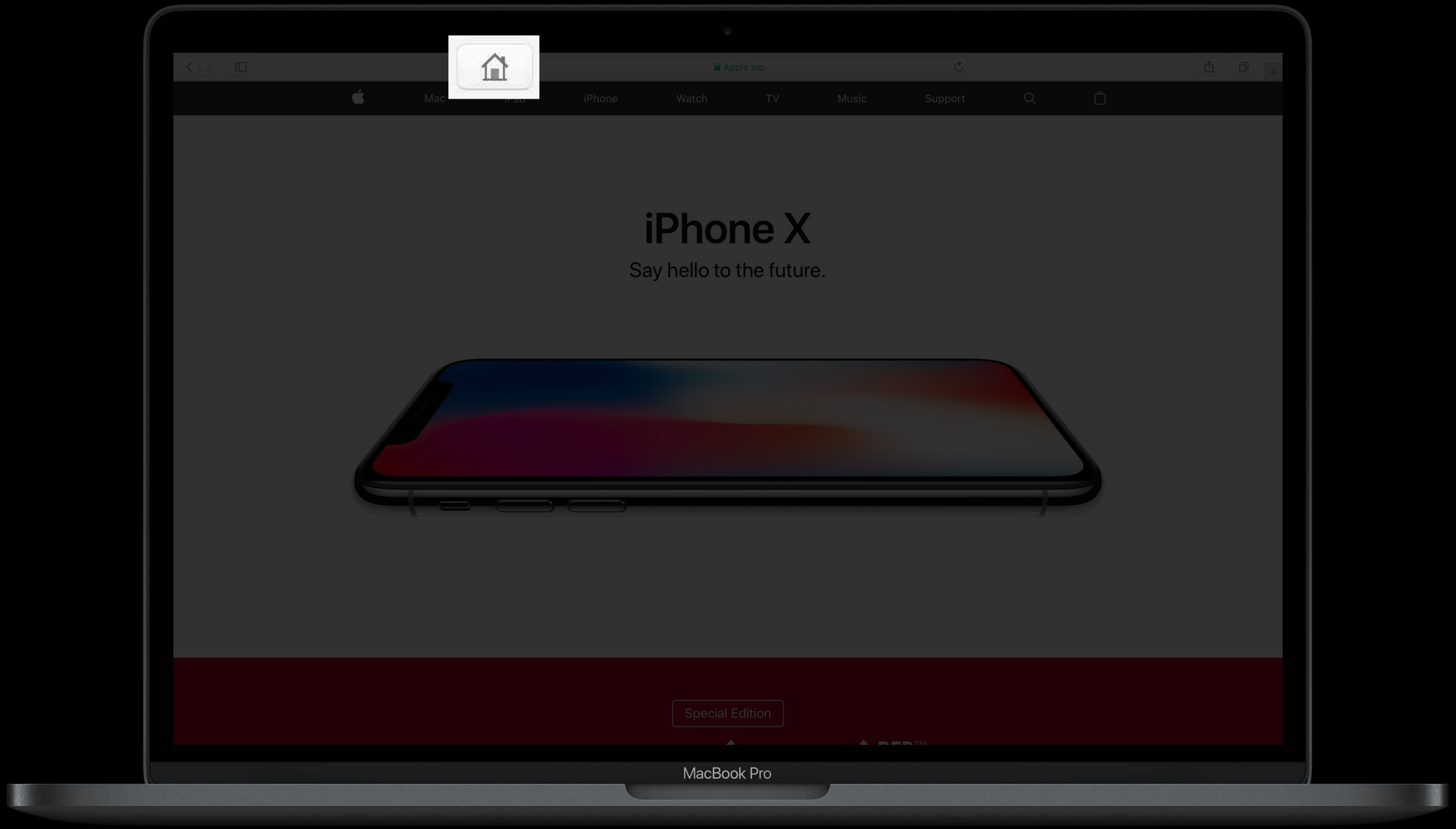
Apple Inc.
Mac
iPhone
Watch
TV
Music
Support
iPhone X
Say hello to the future.
Special Edition
MacBook Pro

9:41 AM
100%
Mail
Monday
4
Calendar
Photos
Camera
Maps
Clock
Weather
News
Home
Notes
Stocks
Reminders
TV
App Store
iTunes Store
iBooks
Health
Wallet
Settings

Shortcut

Finder

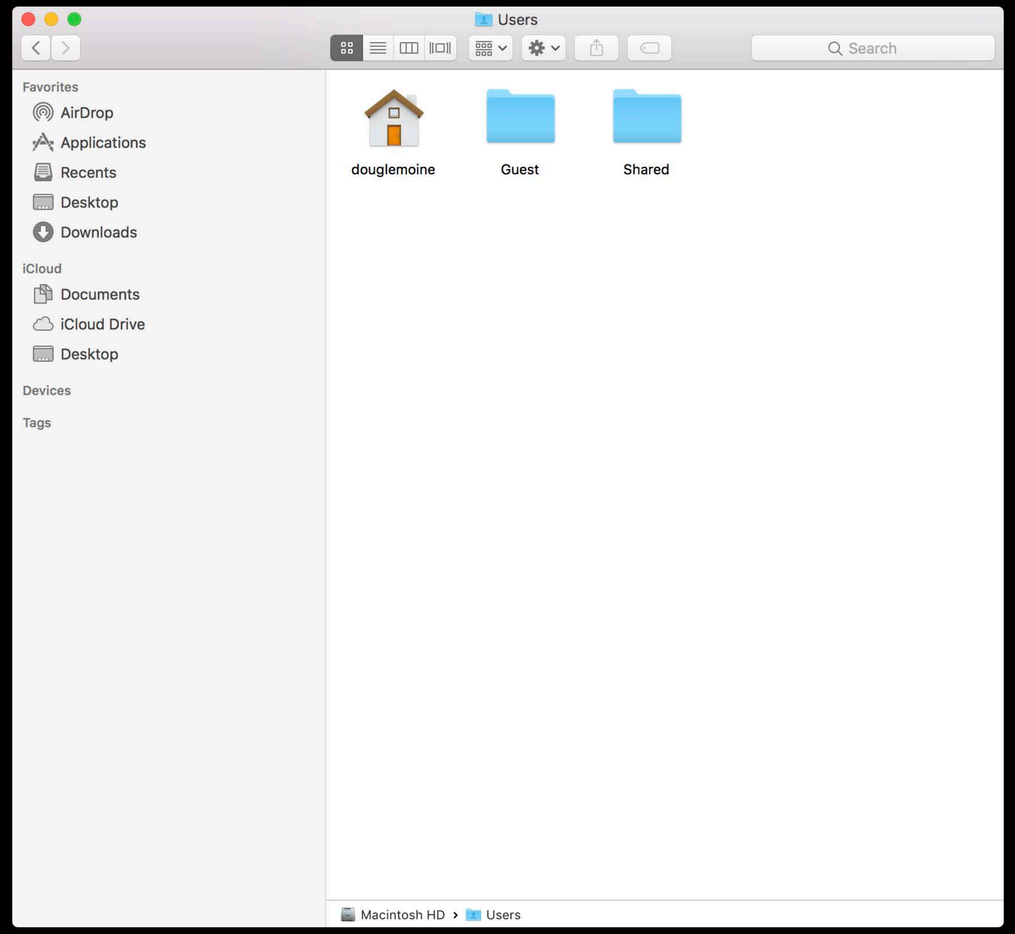
Users
Search
Favorites
AirDrop
Applications
Recents
Desktop
Downloads
iCloud
Documents
iCloud Drive
Desktop
Devices
Tags
douglemoine
Guest
Shared
Macintosh HD › Users

Container

Reliability

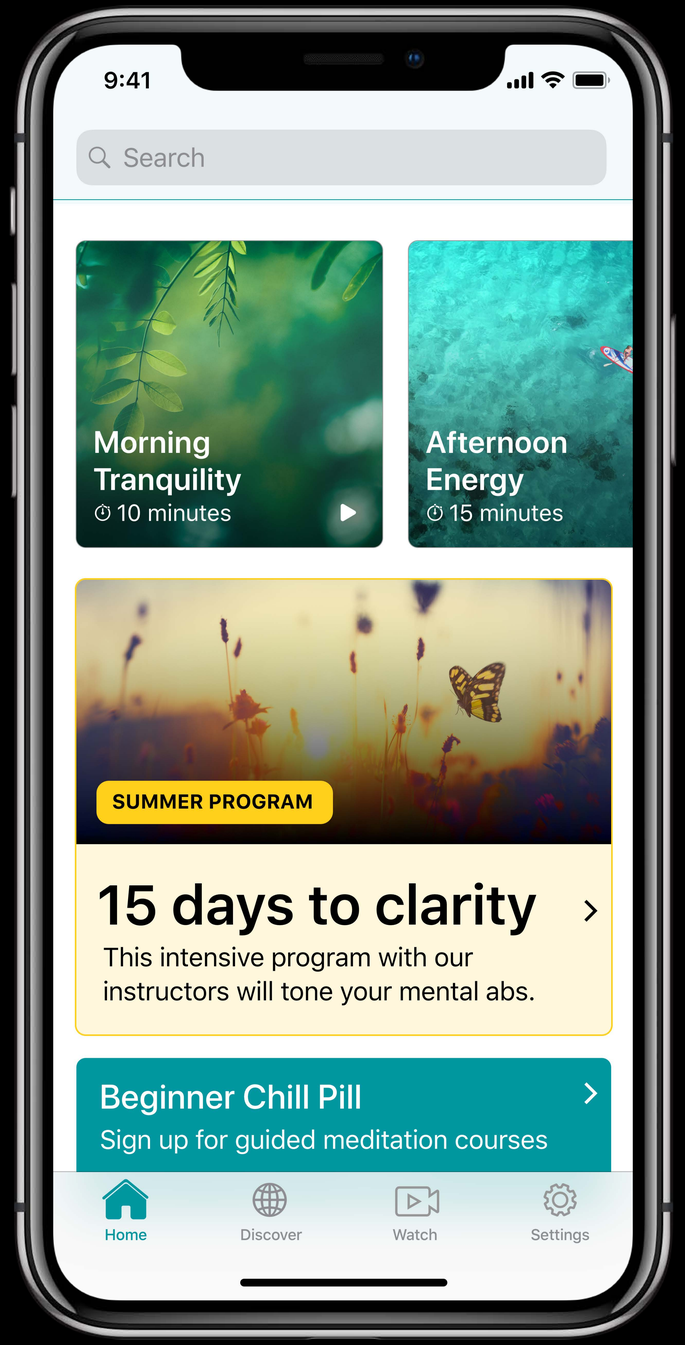
9:41
Search
Morning Tranquility
10 minutes
Afternoon Energy
15 minutes
SUMMER PROGRAM
15 days to clarity
This intensive program with our instructors will tone your mental abs.
Beginner Chill Pill
Sign up for guided meditation courses
Home
Discover
Watch
Settings

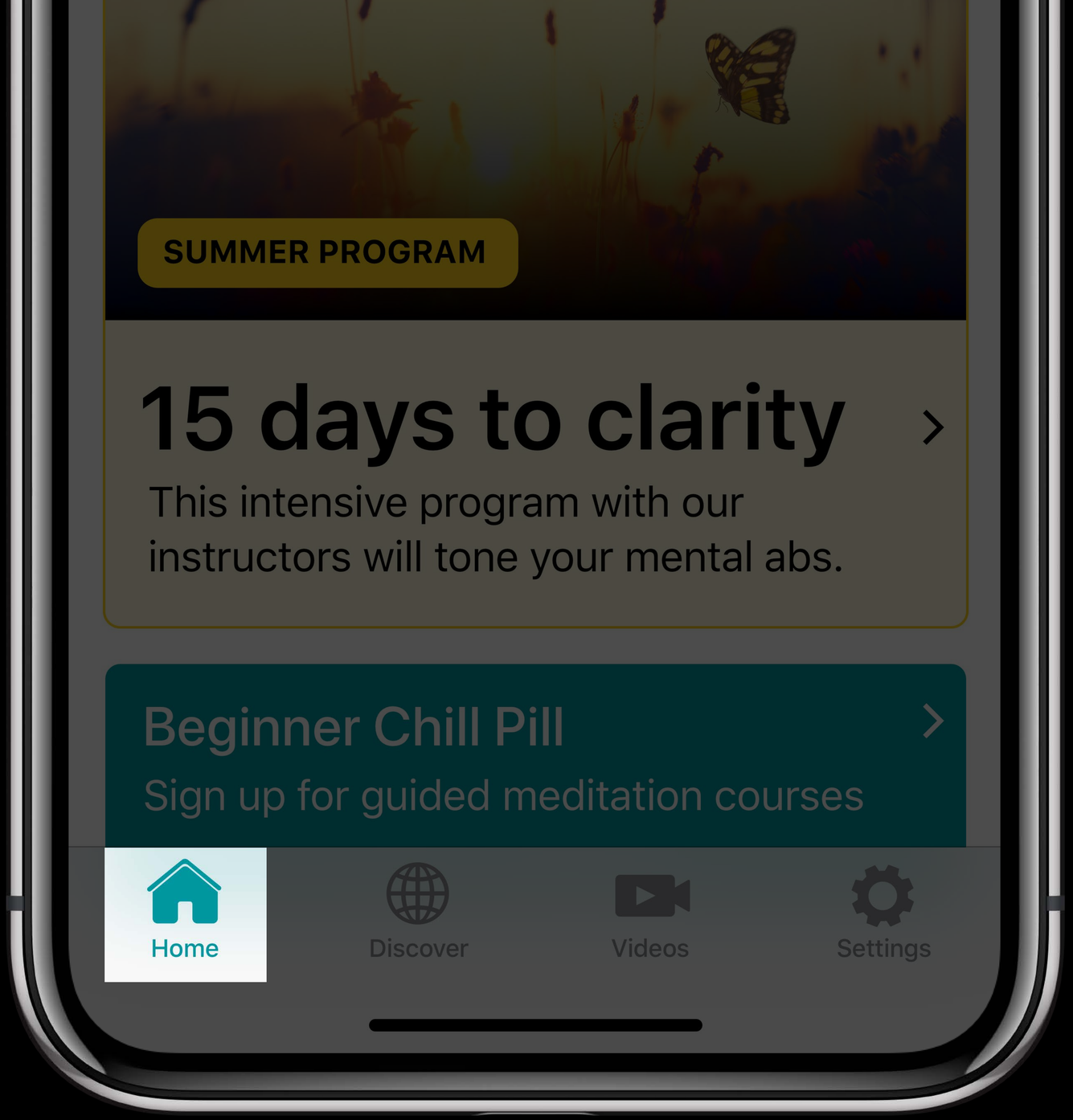
SUMMER PROGRAM
15 days to clarity
This intensive program with our instructors will tone your mental abs.
Beginner Chill Pill
Sign up for guided meditation courses
Home
Discover
Videos
Settings

15 days to clarity

This intensive program with our instructors will tone your mental abs.

Beginner Chill Pill

Sign up for guided meditation courses

Home | Discover | Videos | Settings

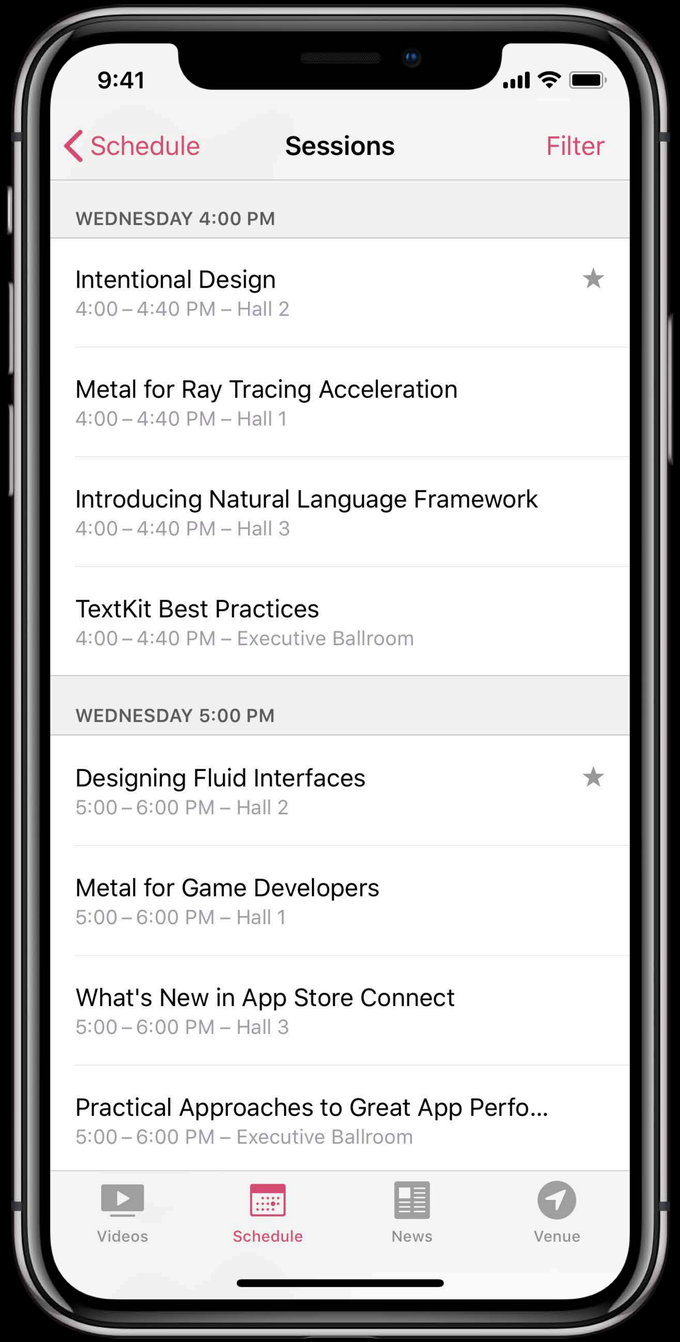
9:41
Schedule
Sessions
Filter
WEDNESDAY 4:00 PM
Intentional Design
4:00 – 4:40 PM – Hall 2
Metal for Ray Tracing Acceleration
4:00 – 4:40 PM – Hall 1
Introducing Natural Language Framework
4:00 – 4:40 PM – Hall 3
TextKit Best Practices
4:00 – 4:40 PM – Executive Ballroom
WEDNESDAY 5:00 PM
Designing Fluid Interfaces
5:00 – 6:00 PM – Hall 2
Metal for Game Developers
5:00 – 6:00 PM – Hall 1
What's New in App Store Connect
5:00 – 6:00 PM – Hall 3
Practical Approaches to Great App Perfo...
5:00 – 6:00 PM – Executive Ballroom
Videos
Schedule
News
Venue

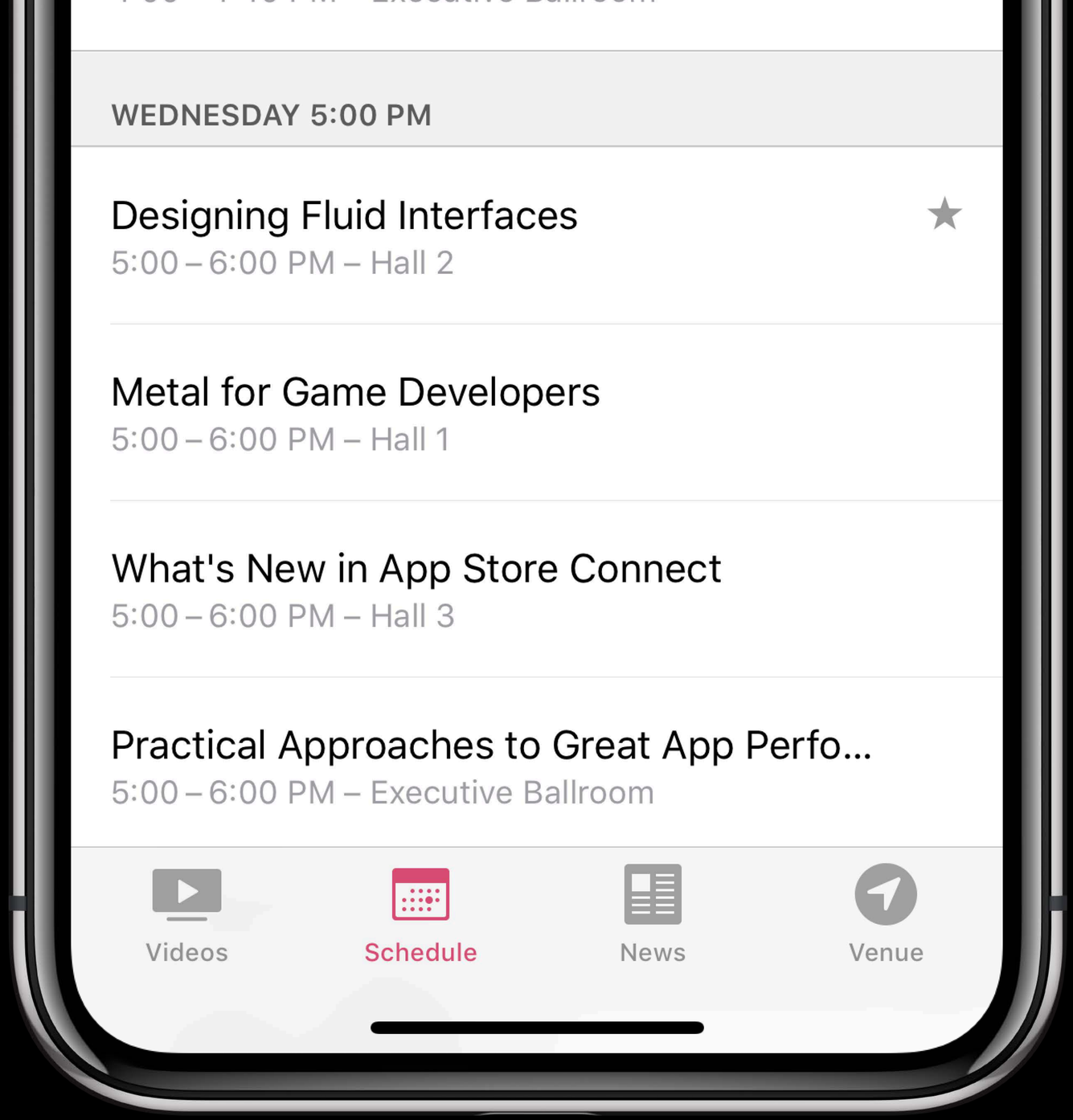
WEDNESDAY 5:00 PM
Designing Fluid Interfaces
5:00 – 6:00 PM – Hall 2
Metal for Game Developers
5:00 – 6:00 PM – Hall 1
What's New in App Store Connect
5:00 – 6:00 PM – Hall 3
Practical Approaches to Great App Perfo...
5:00 – 6:00 PM – Executive Ballroom
Videos
Schedule
News
Venue

Be direct

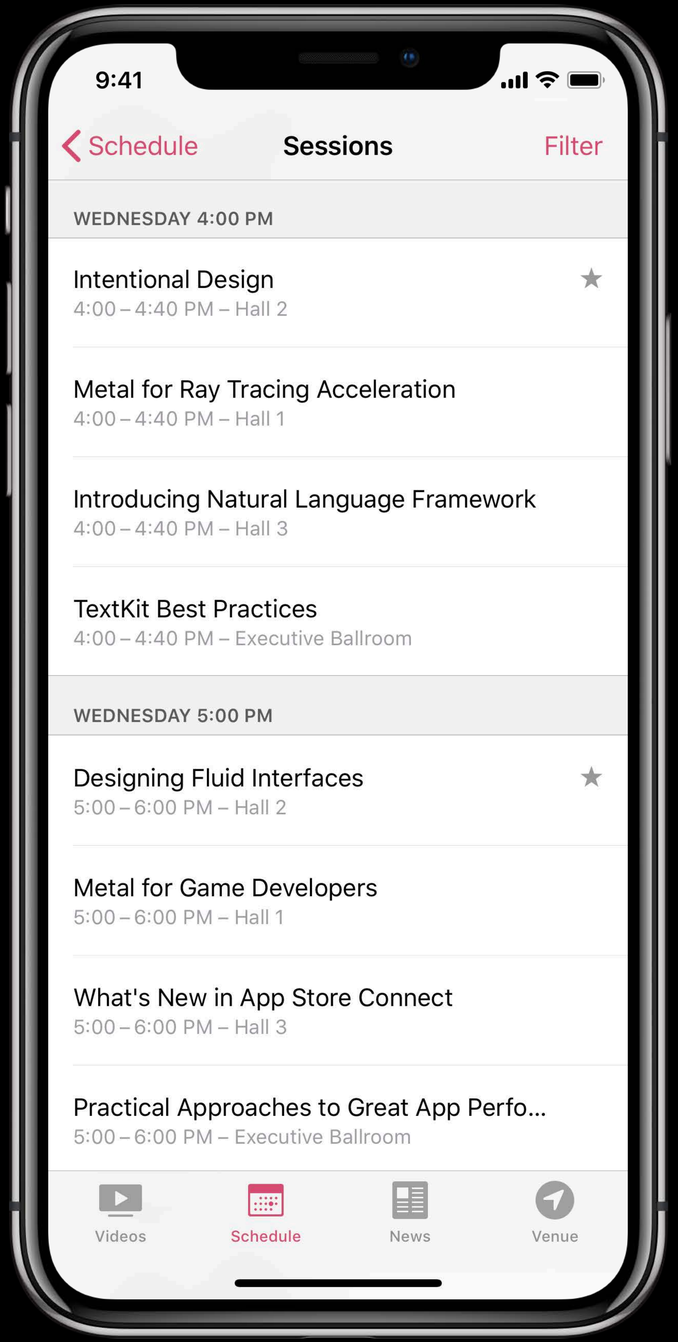
9:41
Schedule
Sessions
Filter
WEDNESDAY 4:00 PM
Intentional Design
4:00 – 4:40 PM – Hall 2
Metal for Ray Tracing Acceleration
4:00 – 4:40 PM – Hall 1
Introducing Natural Language Framework
4:00 – 4:40 PM – Hall 3
TextKit Best Practices
4:00 – 4:40 PM – Executive Ballroom
WEDNESDAY 5:00 PM
Designing Fluid Interfaces
5:00 – 6:00 PM – Hall 2
Metal for Game Developers
5:00 – 6:00 PM – Hall 1
What's New in App Store Connect
5:00 – 6:00 PM – Hall 3
Practical Approaches to Great App Perfo...
5:00 – 6:00 PM – Executive Ballroom
Videos
Schedule
News
Venue

Metaphors

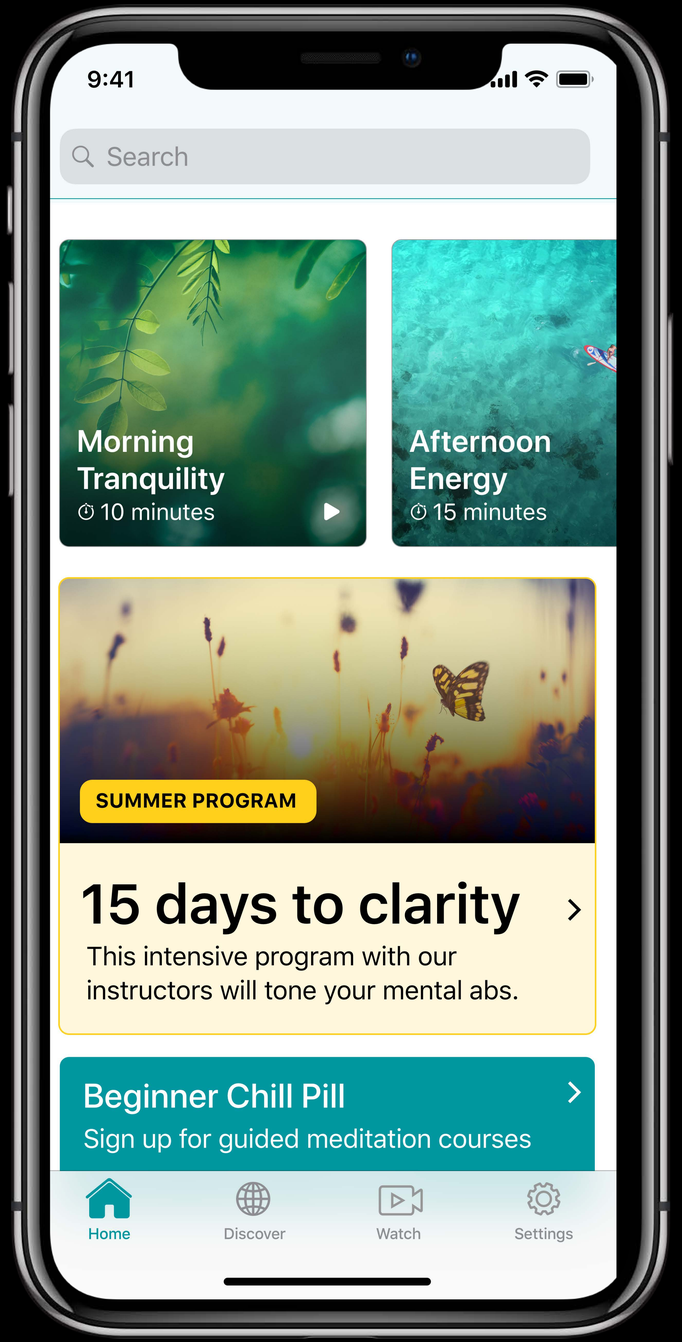
9:41
Search
Morning Tranquility
10 minutes
Afternoon Energy
15 minutes
SUMMER PROGRAM
15 days to clarity
This intensive program with our instructors will tone your mental abs.
Beginner Chill Pill
Sign up for guided meditation courses
Home
Discover
Watch
Settings

15 days to clarity

This intensive program with our instructors will tone your mental abs.

Beginner Chill Pill

Sign up for guided meditation courses

Home | Discover | Watch | Settings

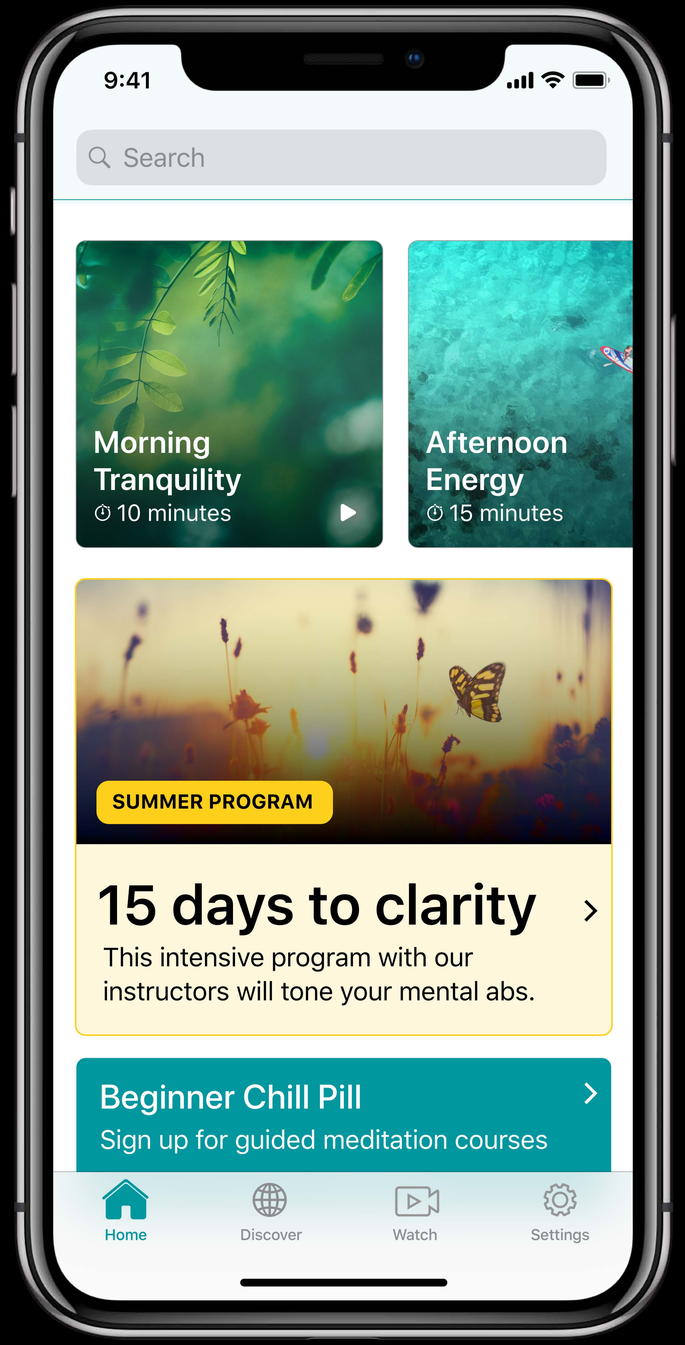
9:41
Search
Morning Tranquility
10 minutes
Afternoon Energy
15 minutes
SUMMER PROGRAM
15 days to clarity
This intensive program with our instructors will tone your mental abs.
Beginner Chill Pill
Sign up for guided meditation courses
Home
Discover
Watch
Settings

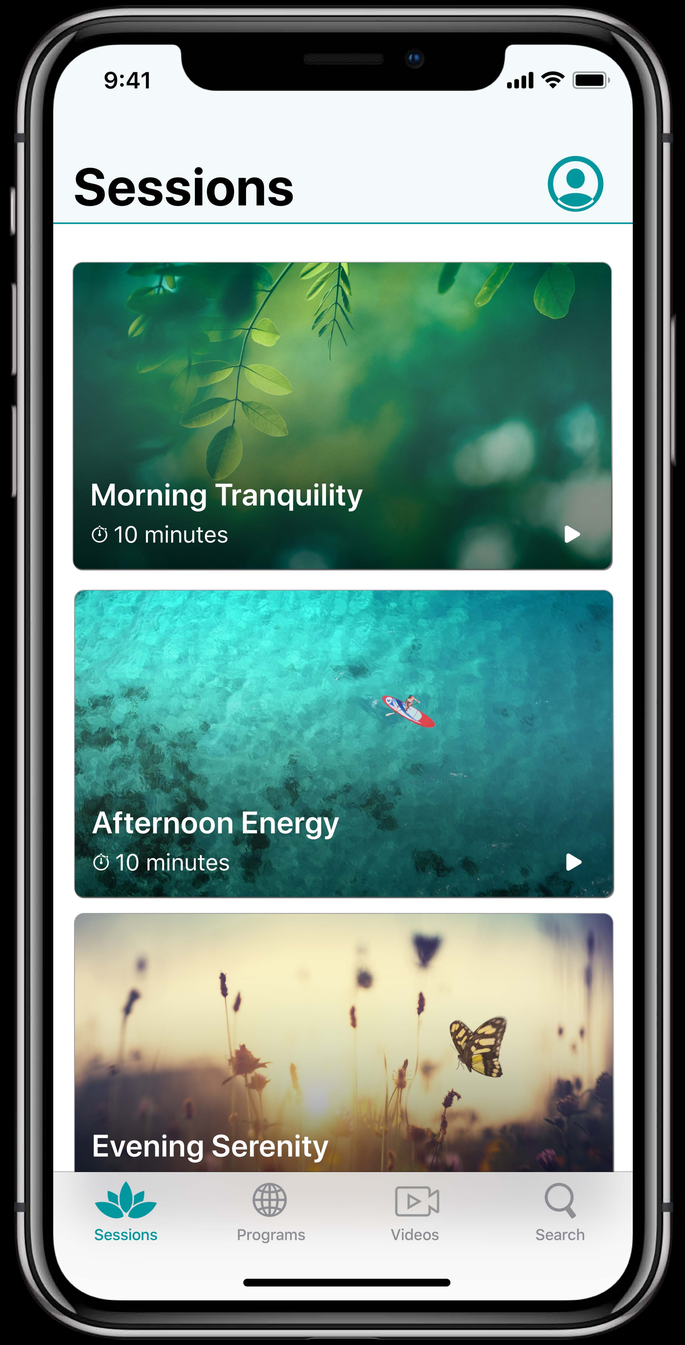
9:41
Sessions
Morning Tranquility
10 minutes
Afternoon Energy
10 minutes
Evening Serenity
Sessions
Programs
Videos
Search

Unintentional design

“We need to create a place in our app that is generic enough to contain basically anything, and therefore confuses people.”

“We need to create a place in our app that is generic enough to contain basically anything, and therefore confuses people.”

No one, ever

1. Radical simplification
2. Deep understanding
3. Extreme focus
4. Personal connection
5. Direct communication

Draw on what people know

Tinycards

NEW CARD
the girl

NEW CARD
the girl

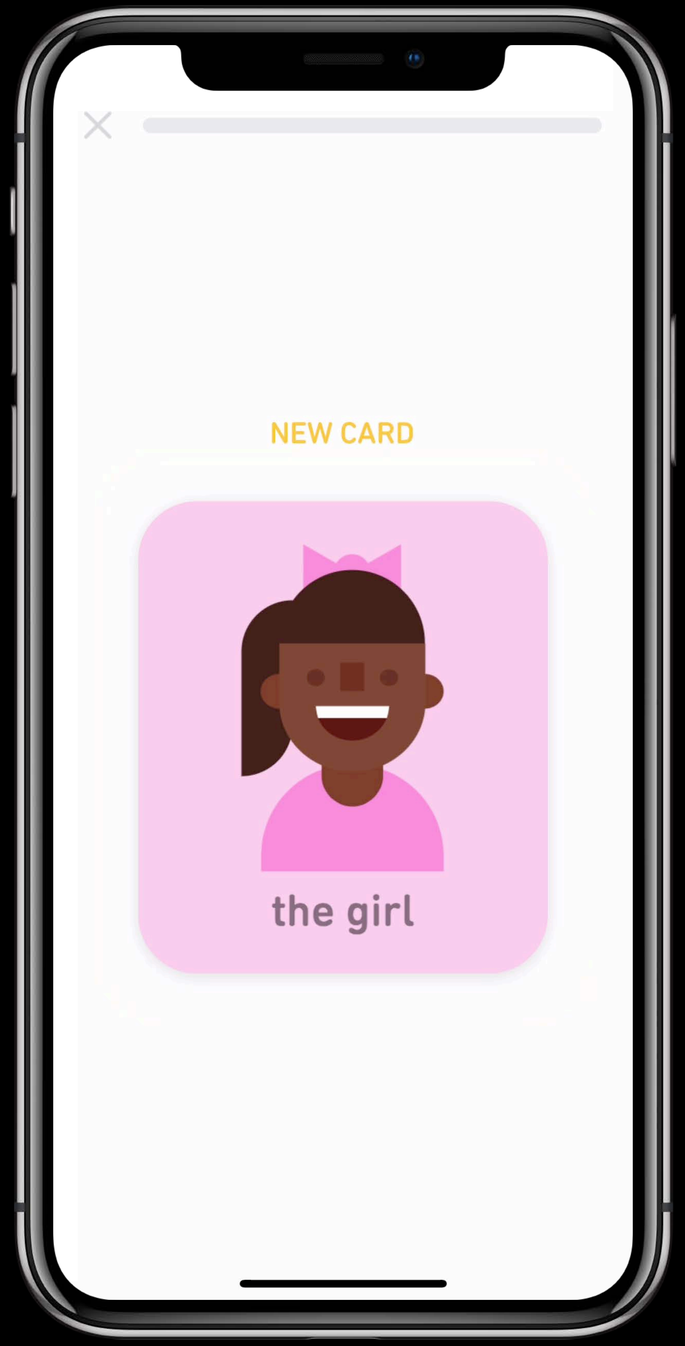
NEW CARD
the girl

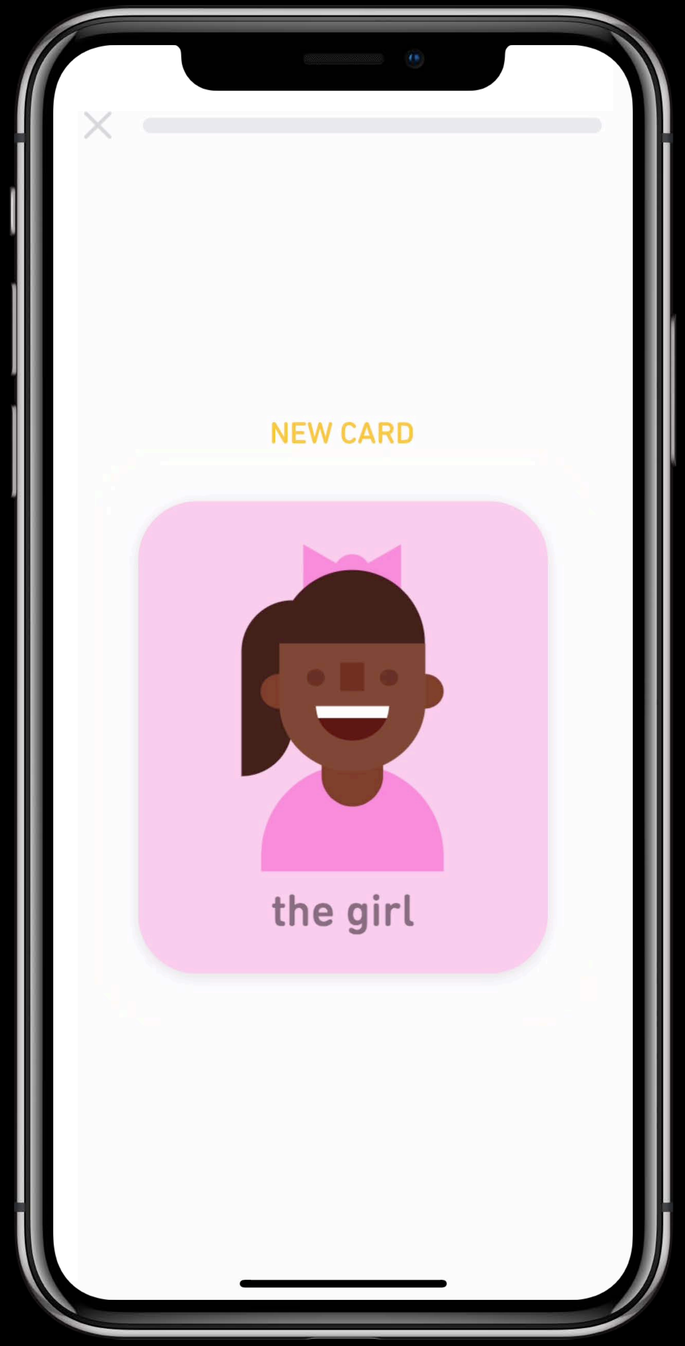
NEW CARD
the girl

NEW CARD

NEW CARD

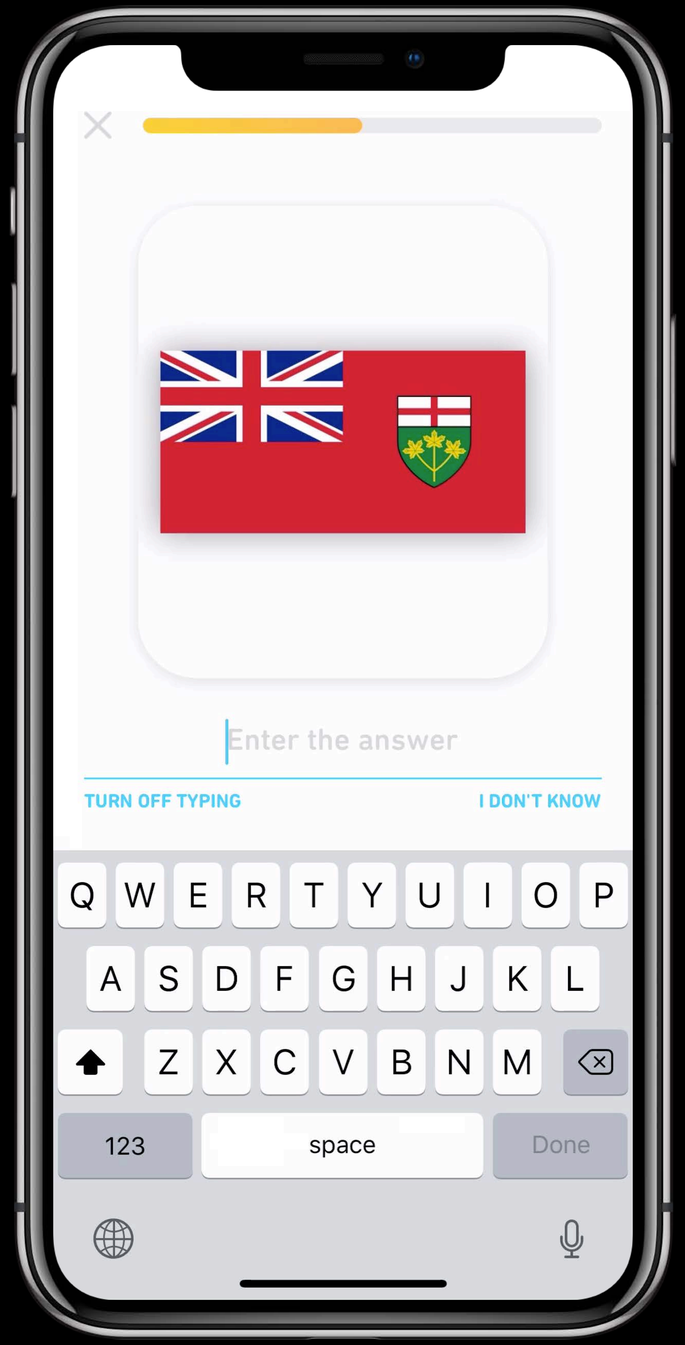
Enter the answer
TURN OFF TYPING
I DON'T KNOW
Q W E R T Y U I O P
A S D F G H J K L
Z X C V B N M
123
space
Done

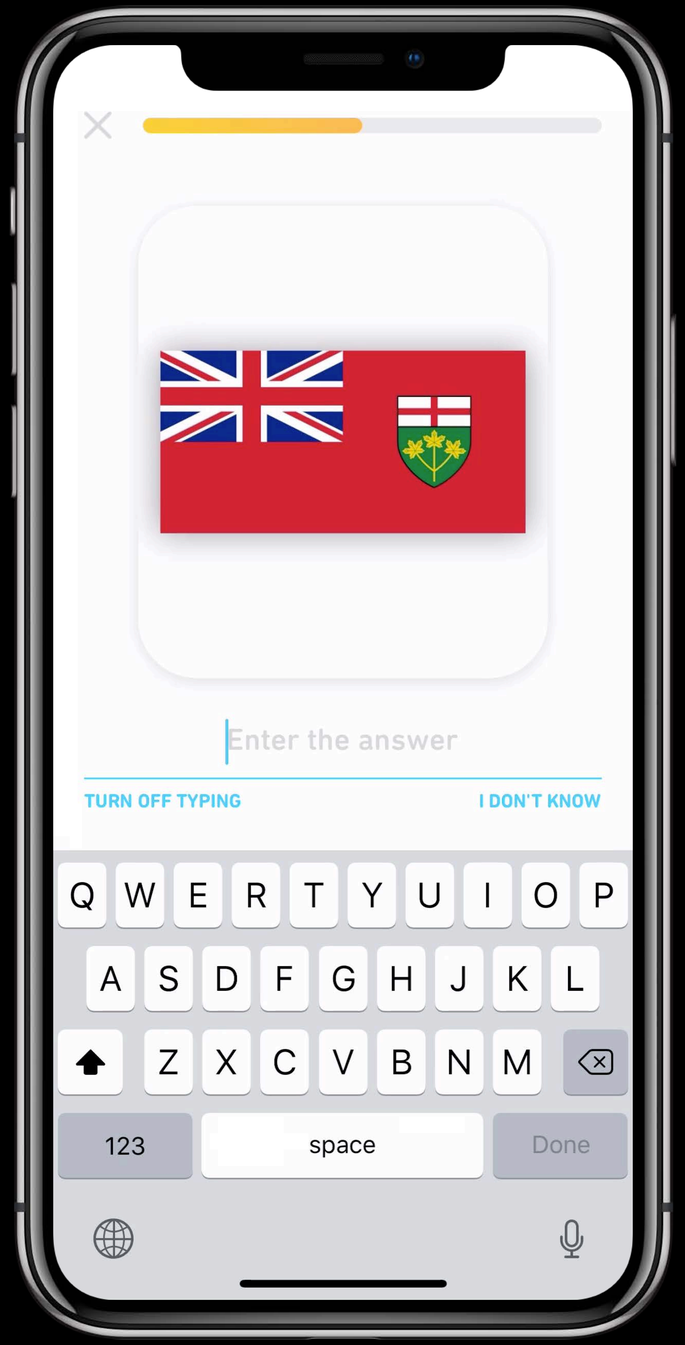
Enter the answer
TURN OFF TYPING
I DON'T KNOW
Q W E R T Y U I O P
A S D F G H J K L
Z X C V B N M
123
space
Done

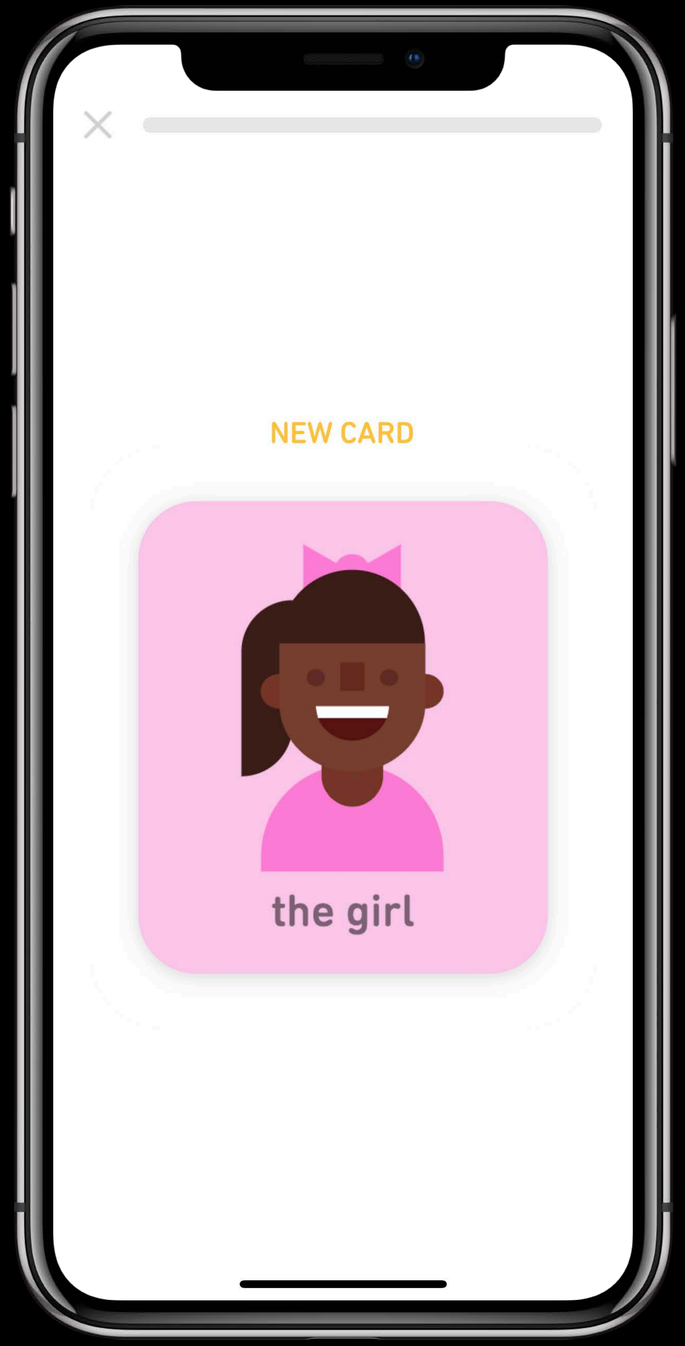
NEW CARD
the girl

Immerse

Extend

Gorogoa

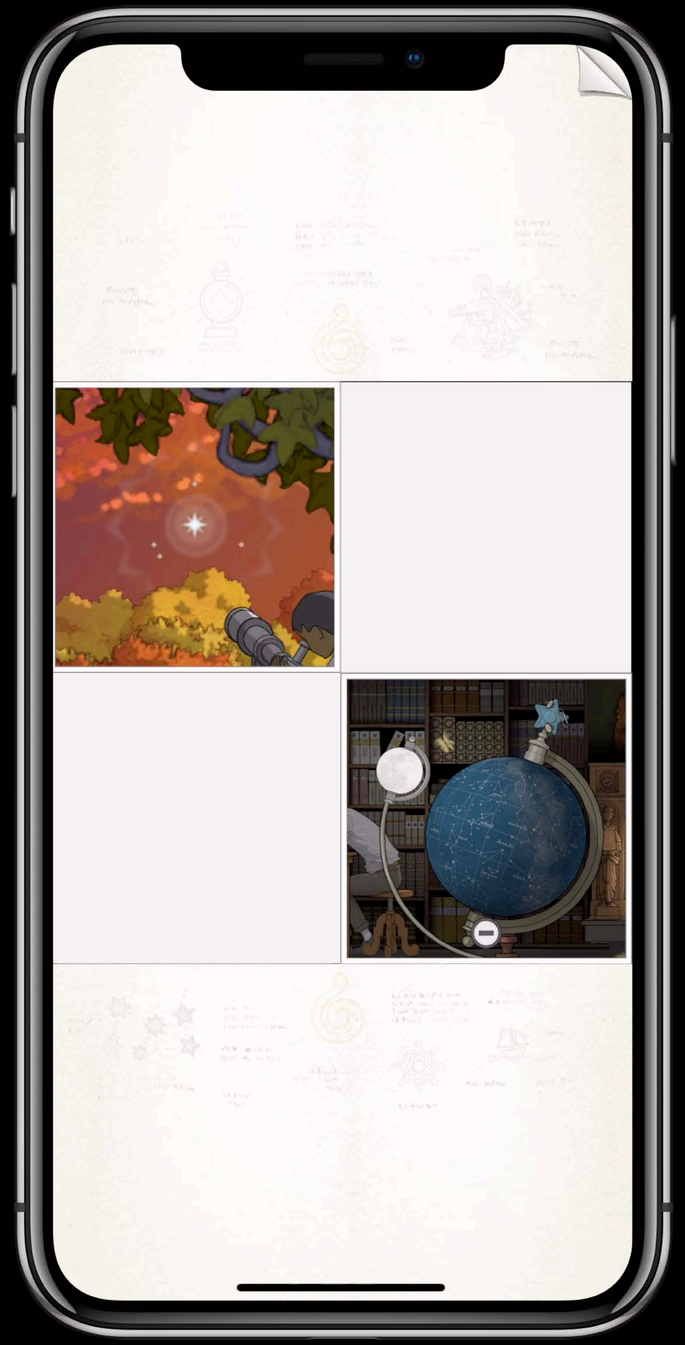

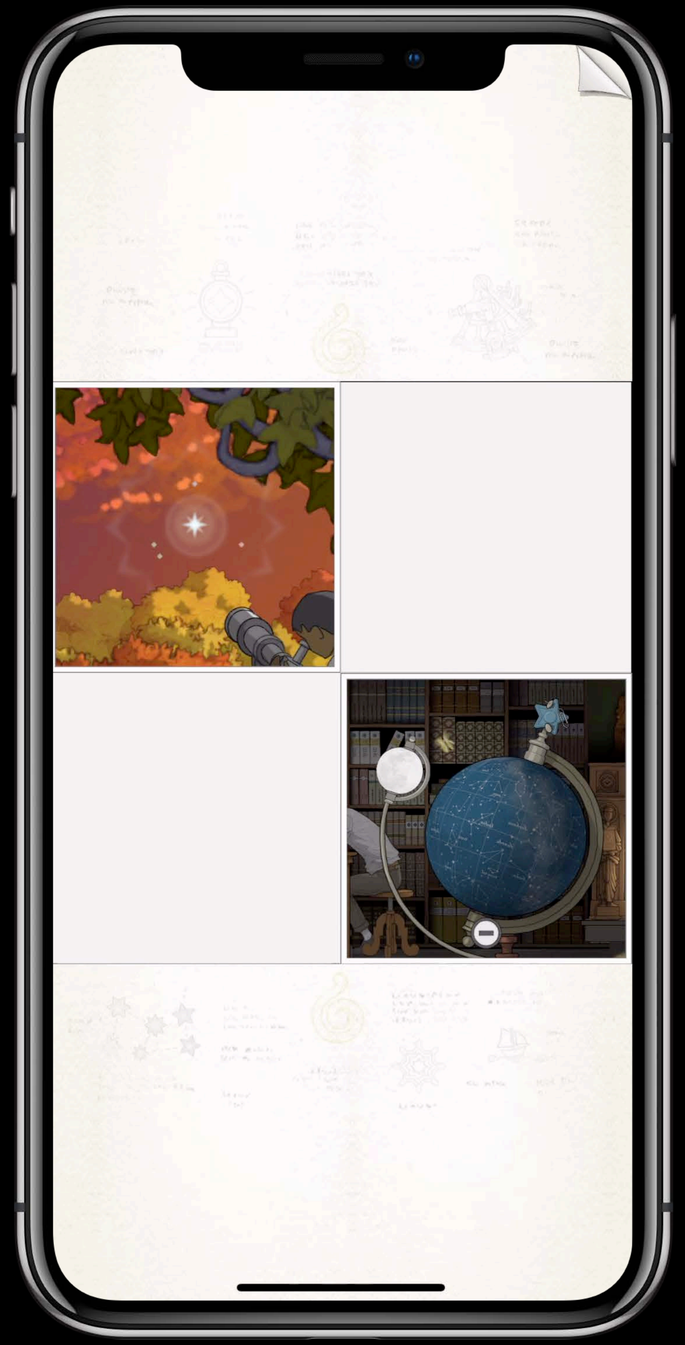

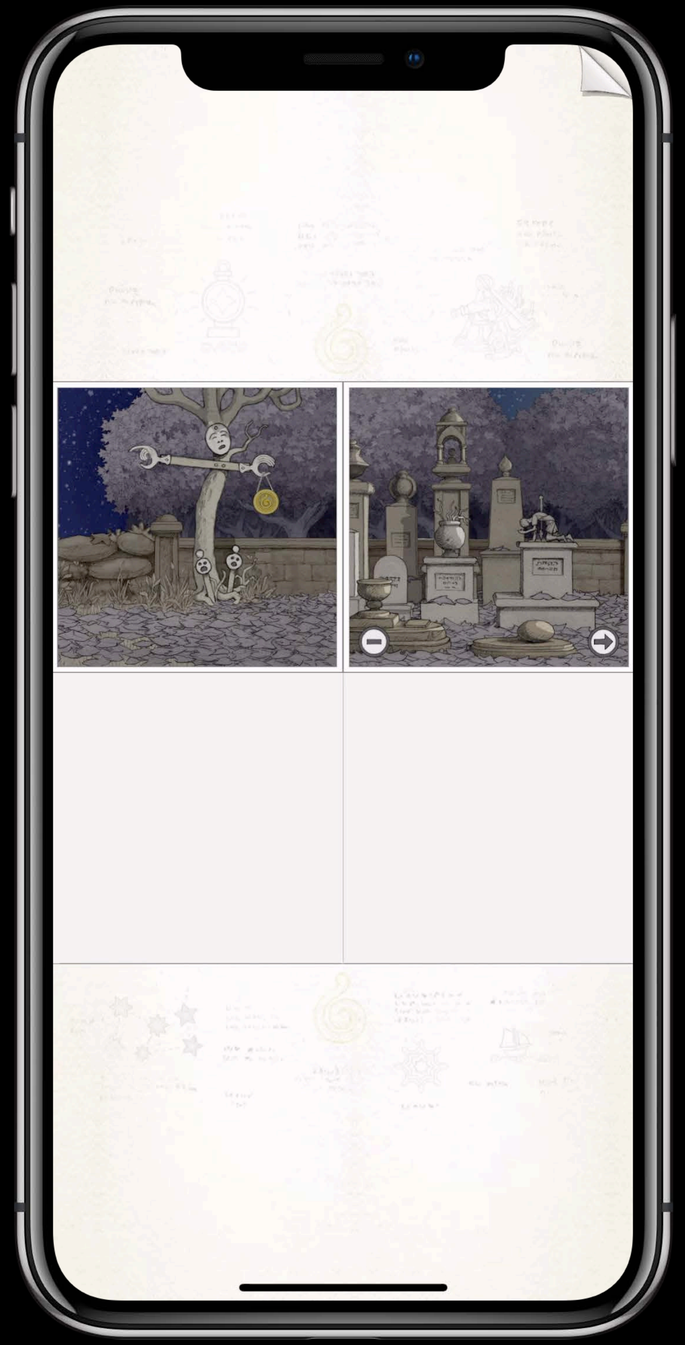

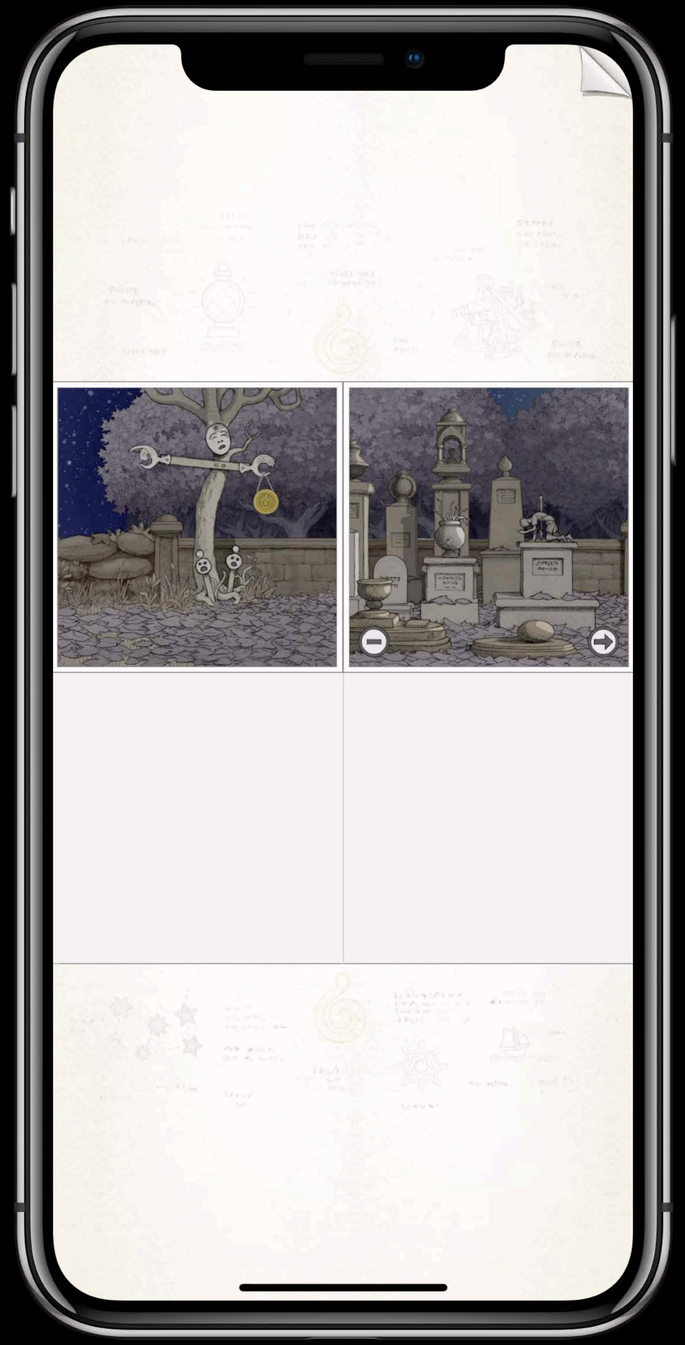

Intent

Rosarium

Rosarium
10:09
Doloris
AVE
MARIA
PN
AM
02
03

Rosarium
10:09
Doloris
AVE
MARIA
02
AM
03
PN
GP

Rosarium
10:09
Doloris
AVE
MARIA
AM
02
03
04
05

Rosarium
10:09
Doloris
AVE
MARIA
PN
AM
02
03

1. Radical simplification
2. Deep understanding
3. Extreme focus
4. Personal connection
5. Direct communication

Be intentional

Slow down

Design consciously

People

Connect

Create something great

More Information

https://developer.apple.com/wwdc18/802

WWDC18